REQUEST FOR PROPOSALS

DENTAL STERILIZATION REMODEL
for the
STOCKBRIDGE-MUNSEE HEALTH AND WELLNESS CENTER
BOWLER, WISCONSIN

MAY 2021

I. Introduction: The Stockbridge-Munsee Community is soliciting proposals from qualified contractors for the remodel of the dental sterilization room at the Stockbridge-Munsee Health and Wellness Center (SMHWC). The facility is located at W12802 County Hwy A, Bowler, Wisconsin.

II. Project Administration: The Stockbridge-Munsee Community is the "Owner" of the facility. The selected contractor will contract directly with the Owner for the services to be rendered.

Proposals will be received by the Tribal Secretary. Proposals shall be addressed to the following individual:

Jody Hartwig, Tribal Secretary
Stockbridge-Munsee Community
P.O. Box 70
N8476 Moh He Con Nuck Road
Bowler, WI 54416
(715) 793-4111
Email: jody.hartwig@mohican-nsn.gov

Site visits and construction services will be coordinated through the Owner's project manager on this project. The Owner's contact for this project is:

Bonnie Welch
SMHWC Safety Manager
W12802 County Hwy A
Bowler, WI 54416
(715) 793-5047
Email: bonnie.welch@mohican.com

The Indian Health Service (IHS) will also be a technical representative as requested by the Owner. The IHS contact is:

Brian Willoughby, P.E., Facilities Engineer
Indian Health Service
9A S. Brown Street
Rhinelander, WI 54501
Office: (715) 365-5114
Email: brian.willoughby@ihs.gov

III. General Information:

1. Acronyms: Definitions, governmental and tribal entities are identified in the document as the following acronyms:

   Tribe/Owner: Stockbridge-Munsee Community
   Contractor/Bidder: Entity submitting proposal to complete the proposed work.

2. Codes, Standards, and Guidelines: The contractor shall ensure all work is performed in accordance with the applicable codes, safety standards, and adhere to the general provisions of the contract documents.

IV. Scope of Work:

Background: The Stockbridge-Munsee Health and Wellness Center was constructed in 1999. The facility is owned and operated by the Stockbridge-Munsee Community. The dental department has been in operation since the facility opened and still retains the original cabinetry and floorcoverings. The dental sterilization room has become outdated and cabinetry has reached end of useful life. The space will be remodeled to address the current deficiencies.

Description of Work: The remodel of the dental sterilization room will include demolition of existing cabinetry and flooring. Improvements include new flooring, construction of partial walls to restrict access/improve infectious control measures, and installation of new cabinetry. The following sections include a general description of the work, but are not limited to this description. (The Contractor shall schedule a site visit prior to submitting the proposal. The Contractor must fully inform itself as to all existing conditions and limitations for the Project). The Contractor shall furnish the necessary personnel, materials, services, and all other appurtenances necessary to perform the work as set forth herein

A. General Carpentry: Complete renovation of existing sterilization room. This will include:

1. Coordination of all plumbing and electrical work.
2. Removal and disposal of existing base cabinetry, countertop, and upper cabinets.
3. Removal of existing drywall bulkhead above upper cabinets along back wall. Installation and finish of new gypsum board on walls where bulkhead is removed.
4. Installation of new drop ceiling to cover where bulkhead is removed. Entire ceiling (grid and tiles) shall be replaced.
5. Removal of existing flooring.
6. Installation of new luxury vinyl plank flooring and base cove. Owner to select colors. Flooring shall extend to walls. Base cove required only on exposed portions of the wall.
7. Construction of partial walls between sterilization room and corridor to control access into sterilization room. Currently one side of room is entirely open to the corridor. Page 3 of Appendix C shows proposed walls. Symmetric partial walls (not extending entirely to the ceiling) shall be constructed on each side of the sterilization room along the corridor to create a 42" access into the sterilization room. Partial walls shall be constructed to a height of 60 inches. Walls shall be constructed of 2x4 wood or steel stud and minimum 5/8" gypsum board on both sides of wall. Minimum double top cap on partial walls to ensure rigidity.
8. Patching, finishing, and painting of all walls within sterilization room and both sides of constructed partial walls. Walls should be orange peel, spray/splatter knockdown finish.
9. Installation of commercial grade vinyl corner guard on corners of partial wall (sterilization and corridor sides)
10. Coordination with installation of cabinets by manufacturer. Owner purchasing cabinets directly from manufacturer. Manufacturer will install cabinets, however contractor is responsible for coordinating electrical and plumbing connections once cabinet installation is completed.

B. Electrical:
   1. Removal of existing surface mount conduits, boxes, and outlets currently located between counter and upper cabinets.
   2. Installation of new 20A commercial grade electrical outlets within gypsum wall with GFCI protection. No new electrical circuits required. Maintain same number outlets as existing and Owner to confirm location of new outlets.
   3. Installation of two (2) outlets coordinated with location of cabinet/shelves for autoclave (sterilization) units (Page 5 of Appendix C).
   4. Includes all wire, conduit, outlets, coverplates, junction boxes, and all other appurtenances required to complete work.

C. Plumbing:
   1. Removal of two (2) sinks. Temporary capping of water supply lines and drain line to double bay sink. Permanent capping of water supply lines and drain line within wall (behind gypsum board) that is currently connected to hand wash sink.

2. Rerouting and connection of water supply lines and drain line to new sink within new cabinetry. New sink will be located on same wall as existing sink, however approximately 16-20" away from existing location. Includes new shutoff valves, piping, and all other appurtenances to connect new sink and faucet.

D. General Requirements:
   1. The contractor is responsible for construction of temporary enclosures to prevent dust in remainder of facility. Contractor shall coordinate construction with safety and infectious control officer to ensure adequate provisions are in place to mitigate risk. Contractor is responsible for following the attached Infection Control Risk Assessment and Construction Plan (Appendix F).
   2. The contractor shall be responsible for the removal of all debris from demolition and construction. There will be a designated work entrance/route during construction.
   3. Contractor shall have a proven track record in interior construction and renovations. References of similar work shall be provided in accordance with Section VIII.
   4. Work shall be completed by technicians who are qualified in their area of work. (i.e. electrical, plumbing, and carpentry)
   5. Contractor shall provide submittals for all materials prior to start of construction. Owner and/or technical representative shall approve materials prior to installation.
   6. If in the course of the work, the Contractor damages, marks, or misplaces anything they will replace it or restore it to its original condition.
      a. The Owner/Technical representative shall decide if something has been damaged. Based on the Contractors proposed fixes, the Engineer shall decide the best course of action to repair any damage done by the Contractor.
   7. Work Area Cleanup:
      a. All work areas shall be cleaned at the end of each day. All debris shall be cleaned and moved off site and disposed of by the contractor.
      b. All equipment shall be moved out of common areas and stored in the Contractor's lay down area, or in other approved storage locations on site.
      c. Any work that may impede the general use of the space, and cannot be removed, shall be flagged and cordoned off by the Contractor. Contractor shall approve areas prior to work to allow for Safety Officer to ensure necessary safety provisions are taken.
      d. All equipment and parts shall be installed in a neat and workmanlike manner. Good installation principles shall be used throughout the project.
   8. Contractor shall provide closeout submittals including drawings showing location of electrical junction boxes, branch circuits, plumbing, and other appurtenances.
   9. This work is included under Bid Schedule – Item #1. Cost shall include work to be completed by all trades.

V. Site Visit/Facility Information

Site visits shall be scheduled through the Owner's Representative. A layout is attached showing the proposed remodel within the dental sterilization room. Contractor/bidder shall complete a site visit to the facility prior to submitting a proposal. Proposals will not be evaluated unless contractor has completed a site visit. Contractor will be required to wear mask and go through screening due to current COVID pandemic before access to facility. Screening includes temperature check and response to screening questions and is conducted at main entrance to the facility.

VI. Overall Project Schedule:

The following project timelines shall be considered and included in the proposal. Any deviation from the proposed timeline shall be listed in the proposal along with an explanation of why the proposed timeline is not feasible. Owner will coordinate with contractor for construction on evenings/weekends to limit disruption to services.

1. Contractor/bidder shall complete a site visit to the facility prior to submitting a proposal. Contractor/bidder shall coordinate site visit with Owner's Representative.
2. Contractor/bidder shall submit all questions on RFP in writing (email acceptable) by Tuesday, June 1, 2021. Contractor/bidder is responsible for confirming questions are received. Responses and/or addendum will be provided to all interested contractors/ bidders by Thursday, June 3, 2021.
3. Proposals shall be submitted to the location noted below by Tuesday, June 8, 2021 at 2:00pm.
4. An award is expected by end June 2021.
5. Substantially Complete (ready for final inspection): Forty-five (45) days after award.
6. Construction Complete: Maximum fifteen (15) calendar days after final inspection.

VII. Qualifications:

Contractor shall be approved/licensed (as applicable) in the State of Wisconsin to complete work and demonstrate the capability to complete such work. Contractor must have been in business for a minimum of four (4) years and have at least four (4) years' experience in work. Contractor/bidder shall include a copy of the following information with their proposal:

1. The contractor shall include at least three (3) other projects where construction/renovation on similarly size projects have been completed, including the name, telephone number, and email of an Owner's representative for each.
2. Brief statement of company experience and qualifications.
3. Proof of liability insurance.
4. List of any sub-contractors that will be hired to perform certain aspects of the

project, along with contact information and company experience.

5. Indian Preference Documentation (if applicable)

VIII. Method of Measurement and Basis for Payment:

Services shall be paid for on a lump sum amount in accordance with the provisions under the attached – Construction Contract. Progressive payment plan will be established with successful bidder if necessary. Minimum 10% retainage will be held until all punch list items are completed.

Prices shall be submitted on bid schedule included in the Appendix A. Lump sum prices shall include:

1. Complete costs for remodel of the dental sterilization room.
2. Pricing shall be based on the entire project including carpentry, mechanical, plumbing, and electrical work. Includes materials, labor, and all other items necessary to complete remodel of the dental sterilization in accordance with the request for proposals and attached construction contract.
3. The Owner is not subject to federal, state and city taxes. The contractor/bidder will not be required to directly pay federal and state taxes.
4. Pricing shall include a minimum one-year warranty on all labor and material warranties as provide by manufacturer.
5. Contractor shall participate in 11th-month warranty inspection.

IX. Notice Regarding Additional Provisions:

1. The successful Bidder and Stockbridge-Munsee Community shall enter in an Construction Contract similar to that found in Appendix D for the services, prices, and terms covered in this RFP.
2. All documents developed in accordance with the project shall be property of the Owner.
3. Neither the Owner's property nor the services under the contract are lienable, since the Project is a public project (state lien laws do not apply on Federal Trust land).
4. The contract is not a Federal contract, and therefore the Owner is responsible for compliance and enforcement of the contract.
5. Davis Bacon Wage Rates are required for all construction (see Appendix E for wage determination).
6. The Indian Health Service will serve as the "technical representative" for this project and contribute the following on behalf of the Owner:
   A. Review and recommendation of proposals.
   B. Participation in pre-construction meeting and progress meetings (as applicable).
   C. Review and approval of submittals, pay requests, and change orders.
   D. Site inspections including a final inspection of work completed to determine if

any punchlist items or warranty items exist and need to be corrected.

X. Proposals to Include:

Proposals shall include at minimum the following items to be considered responsive:

1. Signed Bid Schedule – Appendix A.
2. Qualifications as outlined above.
3. Proof of liability insurance in accordance with attached Appendix D.
4. Indian Preference Documentation (if applicable)
5. Site Visit: Contractor must contractor must coordinate a site visit through Owner's contact listed above for proposal to be considered responsive.

XI. Submission and Review of Proposals:

Proposals shall be submitted to the Tribal Office Building, ATTN Jody Hartwig, Tribal Secretary, by **Tuesday, June 8, 2021 at 2:00 pm** by certified mail, personal delivery, or email. The Tribal Office Building is located at P.O. Box 70, N8476 Moh He Con Nuck Road, Bowler, Wisconsin 54416. Plainly mark the outside of the envelope containing the Proposal with the following notation, **"PROPOSAL ENCLOSED – HEALTH CENTER DENTAL STERILIZATION REMODEL"**. Any proposals received after 2:00pm will not be considered. Electronic submissions can be emailed to jody.hartwig@mohican-nsn.gov. Electronic submissions shall be a single "PDF" attachment. Contractor is responsible for confirming submission and receipt of proposals.

XII. Evaluation of Proposals:

The following will be considered in selecting a bidder/contractor to complete the work:

1. Qualifications (20%)
2. Experience in Similar Projects (20%)
3. Overall Cost (50%)
4. Indian Preference (10%)

XIII. Proposal Acceptance:

Bid Form: Proposals shall include a copy of the bid schedule as attached in the Appendix A. An authorized representative of the contractor/bidder must sign the bid form.

Proposal Review and Award: Proposals based on this RFP will be used by the Owner as a basis for comparison. A selection will be made based on the actual services proposed to be provided and the extent of the tasks for the cost. The Owner reserves the right to accept and/or reject any and all proposals, to waive any and all informalities and/or irregularities

in bid proposals submitted during the bidding process, to award the Contract to a Bidder which is not the lowest Bidder, to make a partial award, and/or to negotiate the Construction Contract with regard to possible modifications to the proposed scope of work prior to the award of a contract. The Owner also reserves the right to amend the scope of work based on the results of previously completed work. Owner may negotiate the amount of work to be completed based on available funding.

Proposal Withdrawal: Bid prices shall be guaranteed for a minimum of sixty (60) days from the bid due date. Proposals may not be withdrawn for a period of sixty (60) days after the time established for receipt of proposals. Bidders may withdraw at any time prior to the time set for the receipt of proposals.

ATTACHMENTS TO THIS REQUEST FOR PROPOSALS:

Appendix A – Bid Schedule
Appendix B – Existing Layout/Pictures
Appendix C – Proposed Layout
Appendix D – Construction Contract and Insurance Requirements
Appendix E – Davis Bacon Wage Rates
Appendix F – Infection Control Risk Assessment and Construction Plan

APPENDIX A - BID SCHEDULE

Dental Sterilization Remodel
Stockbridge-Munsee Health and Wellness Center

SCHEDULE A

ITEM NO.	DESCRIPTION	EST. QTY.	UNIT	UNIT COST	TOTAL COST
1	Dental Sterilization Remodel	1	Lump Sum	_____	_____
				Total	_____

_____ Signature:

_____ Date:

_____ Company:

NOTE TO OFFERORS:

THE OFFEROR MUST SUBMIT A PROPOSAL ON ALL ITEMS OF THE SCHEDULES AS AWARDS WILL BE MADE IN AGGREGATE. THE CONTRACTOR SHALL BE PAID FOR ACTUAL QUANTITIES COMPLETED.

Appendix B - Existing Layout/Pictures

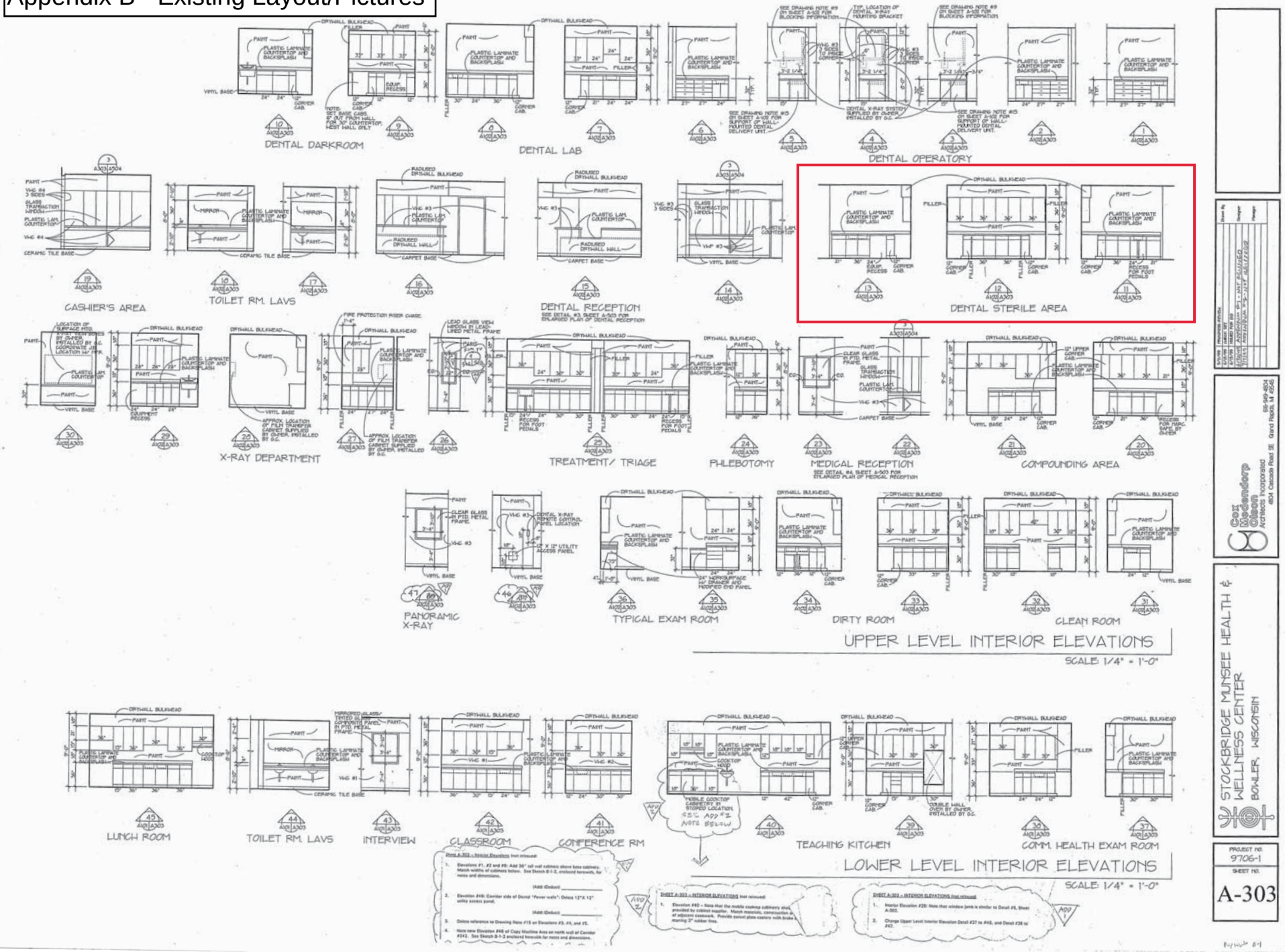

Appendix B - Existing Pictures

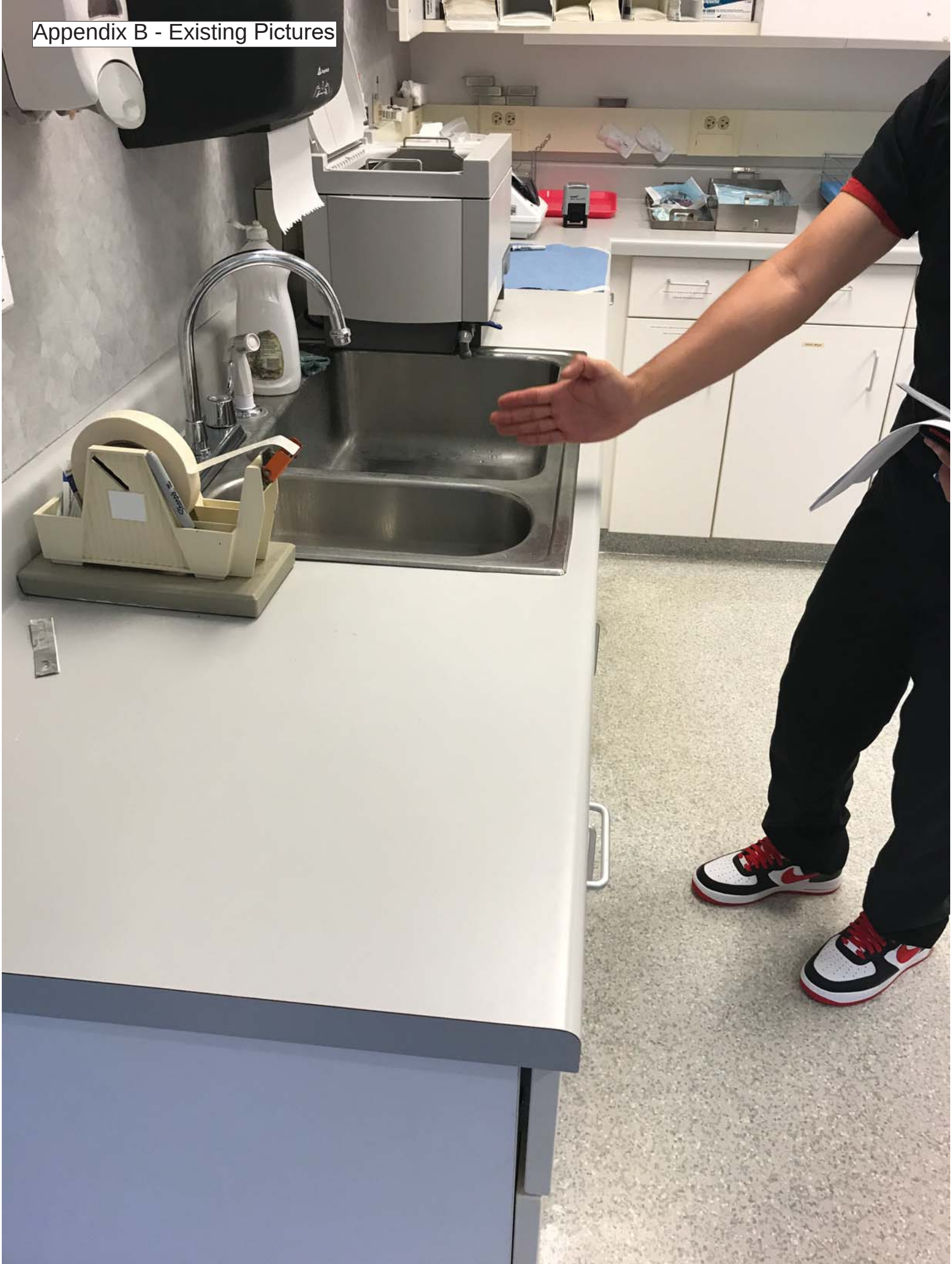

SHARPS DISPOSAL CONTAINER
Place Indicator in each Cassette
Georgia-Pacific
ADD 3 PUMPS EMPOWER CLEANER AND 3 GALLONS WATER FOR ULTRASONIC USE
MAINTENANCE
BioSonic UC200
whaleident

PP4
#47-49
Power Disconnected
in Panel

Georgia-Pacific
assistina
301 plus

RECLOSEABLE SANDWICH BAGS
CROSSTEX
assistina
301 plus
TAGGED INSTRUMENTS
20X20 WRAP

RECLOSEABLE SANDWICH BAGS
CROSSTEX
DO NOT TOUCH
With DIRTY Gloves
Press Clear
Open Door
Always Check Instruments
Before Removing
Delta
DELTA XL
TAGGED INSTRUMENTS
MAXILLARY FORCEPS
MANDIBULAR FORCEPS
20X20 WRAP

SofPull
Stockbridge-Munsee Health and Wellness Center
CODE 4-DURESS PLAN
TO INITIATE THE DURESS PLAN:
PUSH "PAGE" BUTTON ON ANY
IN-HOUSE PHONE
ANNOUNCE "CODE 4" AND LOCATION 3 TIMES,
OR PRESS WIRELESS PENDANT
RESPONDERS WILL MEET AT LOCATION OF DURESS ALERT
The code 4 duress plan can be categorized into the following:
A house wide alert to situations that are threatening
Potentially hostile actions
Threats
Persons carrying weapons with the intent to commit bodily harm
Other dangerous situations to staff or patients
STAPLES
Garbage
Bottenes
to go
Downstairs
D&S
DENTAL

Midmark Drawings

Project Name: Stockbridge Munsee Health & Wellness Center

Project #: MS190938

Phase: 01

Rev: 7

Date: 4/23/2021

Project Rep: Jorgen Booker

Jbooker@midmark.com

Designer: Shannon Schwieterman Ext: 128406

sschwieterman@midmark.com

Phone: 1-800-MIDMARK

These drawings are the sole property of Midmark Corporation and are to be used for illustration only. Actual product appearance may vary.

Midmark Quotation

Terms & Conditions

Project Information:

Project Name: Stockbridge Munsee Health & Wellness Center
Project #: MS190938 **Phase:** 01 **Rev:** 7
Agreement: Medical Indirect GSA Pricing (Standard)

Midmark Rep Information:

Project Rep: Jorgen Booker
Email: Jbooker@midmark.com

Designer Information:

Designer: Shannon Schwieterman Ext: 128406
Email: sschwieterman@midmark.com
Phone: 1-800-MIDMARK

Midmark Order Policy

- Order will not be sent to scheduling until a purchase order, signed drawing and field measurements (if applicable) are received.
- Installation is not included unless noted otherwise.
- Taxes and plumbing hook-ups are not included in the pricing.

Order Changes

- All changes should happen before the receipt of the order.
- Order changes made after receipt of an order may incur a change fee and a shipping date change. This fee will cover materials, labor, and handling costs.
- All changes must be submitted in writing. Upon review and approval of changes, the order will be moved to the next available ship date.

Delayed/Rescheduled Ship Dates

- Request to reschedule orders that have not been built will be moved to the next available ship date.
- Request to reschedule or delay shipment of orders that have been built will incur storage and handling fees until shipped.

Order Cancellation

- Cancellation 48 hours from time of order placement is subject to penalty. An assessment will be made at time of cancellation to determine the amount of penalty including material, labor and handling costs.
- Cancellations must be received in writing. Non-standard color and custom configuration orders may not be cancelled without penalty.

Return of Merchandise

- Custom Cabinetry and Workstations are built-to-order and are non-returnable.

Shipping and Receiving Policy

- Cabinetry Packaging: Boxed. Cabinetry accessories and equipment will be boxed.
- Orders shipped via common LTL carrier or full truckload carrier.
- Please specify your preferred delivery date.
- Preferred delivery date is not guaranteed based on Midmark lead time and carrier's availability.
- Please specify if delivery site is NOT able to accept delivery on a full-size 53' truck and trailer.
- Report any damaged goods or short shipments to the freight carrier and contact Midmark Corporation immediately.
- Please specify if lift gate is required.
- Customer is responsible for freight unless discussed otherwise during quoting.
- Optional delivery services available for additional charges include: customer assisted inside delivery, guaranteed delivery and Premier Delivery Service. Please call for a quote for these additional services.

Lead Times

- Cabinetry lead time on standard items and color: 4-8 weeks**
- Equipment/Workstation lead time: 1-3 weeks**

*****Lead times are subject to change based on volume and quantities***

GSA

- Contract # V797P-4435B / Duns #: 005036025 / Cage Code: 90768 / Tax ID #: 34-4269370 / SAM Registered / GSA Advantage.
- Terms: 2% 30 days excluding credit card orders / Credit card accepted.
- F.O.B. Destination: normal loading dock within the contingous USA / POE to AK, HI, PR and Intl.
- If a dealer or contractor is purchasing on behalf the government, Midmark requires written permission from the government facility confirming this agreement prior to placing the order.

Approvals

Project Name: Stockbridge Munsee Health & Wellness Center
Project #: MS190938
Phase: 01 **Rev:** 7

I acknowledge the following for all applicable pages:

	Approved	Revised to Reflect
Colors & Finishes	[ ]	[ ] _____
Configurations, Sizes & Field Measurements	[ ]	[ ] _____
Terms, Conditions & Delivery Instructions	[ ]	[ ] _____

Signature _____ Date _____

Cabinetry

Panel Styles: Serenity

Handle Types: TBD

Handle Finishes: Brushed Nickel

TBD Solid Surface
Solid Surface

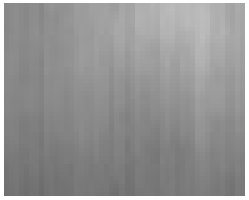

TBD Woodgrain/Metallic
Panel/Cabinet

Countertops

Materials: Solid Surface

www.midmark.com
design@midmark.com
Phone: 1-800-MIDMARK

Project Name: **Stockbridge Munsee Health & Wellness** Project #: **MS190938** Phase #: **01** Rev: **7**

Room Plan View

Signed Drawings Required To Process Order

(Signature) **(Date)**

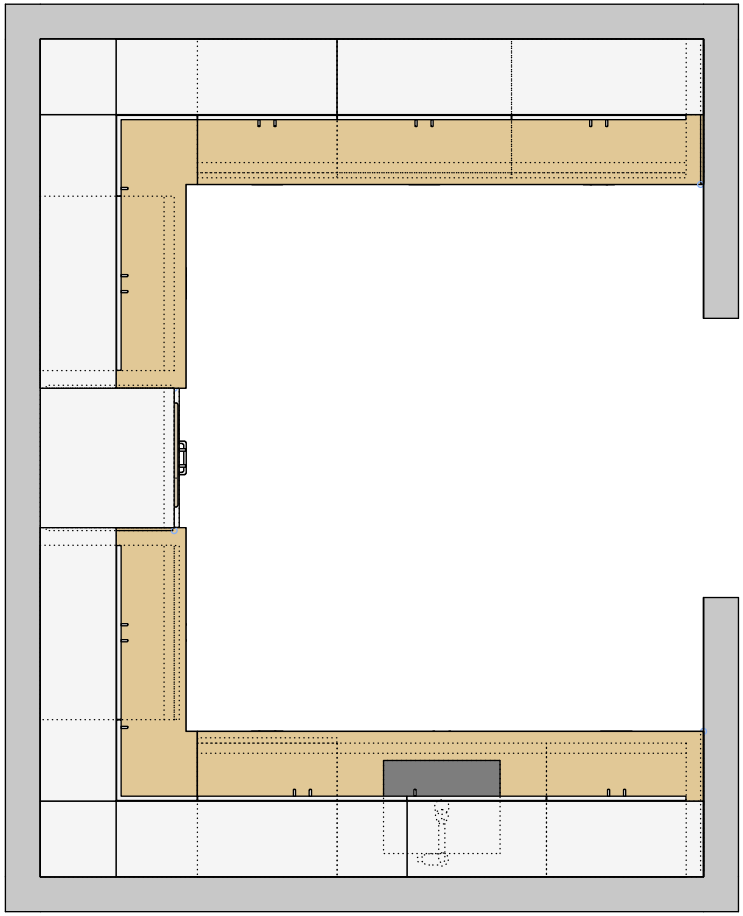

Sterilization

www.midmark.com
design@midmark.com
Phone: 1-800-MIDMARK

Project Name: **Stockbridge Munsee Health & Wellness** Project #: **MS190938** Phase #: **01** Rev: **7**

Base Finish:	100-TBD Woodgrain/Metallic	Tasklight:	None	Top Material:	Solid Surface
Upper Finish:	100-TBD Woodgrain/Metallic	Grommet:	None	Top Color:	TBD Solid Surface
Panel Style:	Serenity Panel	Ultrasonic:	None	Note:	
Handle:	Brushed Nickel TBD	Note:		Sink:	USX-1620-A
Lock:	No Lock	Note:	Field Measurement Required	Faucet:	CFT-8CHGSPULL-1

Signed Drawings Required To Process Order

(Signature) **(Date)**

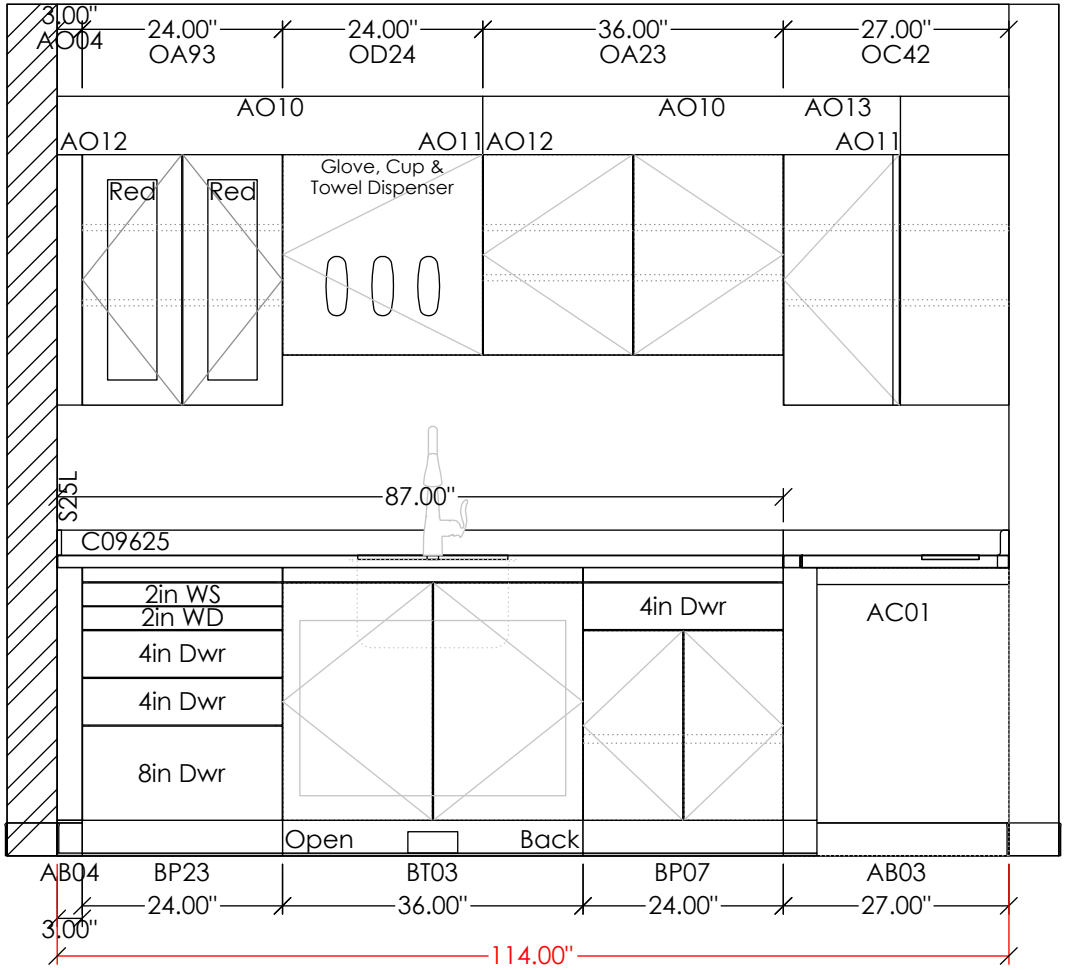

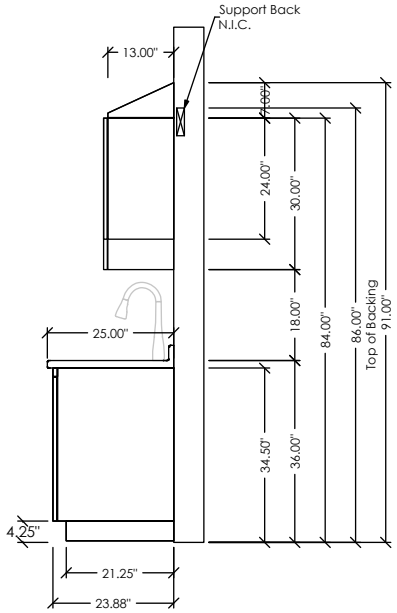

Sterilization

See Countertop Detail Sheet: Solid Surface A , Rolled Edge w/ Int BS 1" x 3"

www.midmark.com
design@midmark.com
Phone: 1-800-MIDMARK

Project Name: **Stockbridge Munsee Health & Wellness**		Project #: **MS190938**		Phase #: **01**	Rev: **7**
Base Finish:	100-TBD Woodgrain/Metallic	Tasklight:	None	Top Material:	Solid Surface
Upper Finish:	100-TBD Woodgrain/Metallic	Grommet:	AC22.0606, AC21.0606	Top Color:	TBD Solid Surface
Panel Style:	Serenity Panel	Ultrasonic:	None	Note:	
Handle:	Brushed Nickel TBD	Note:		Sink:	None
Lock:	No Lock	Note:	Field Measurement Required	Faucet:	None

Signed Drawings Required To Process Order

(Signature) **(Date)**

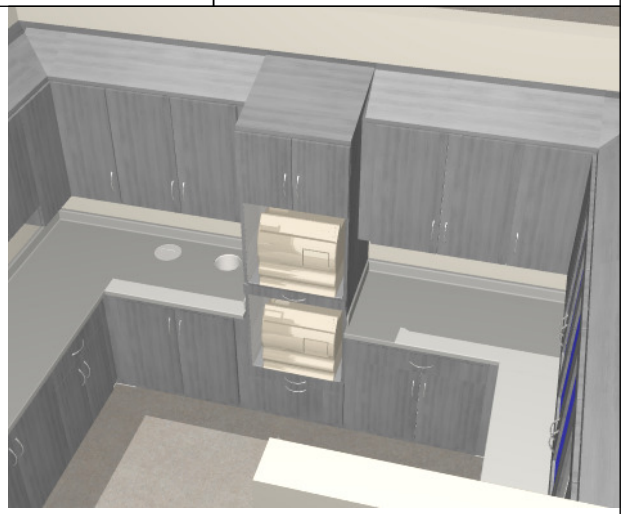

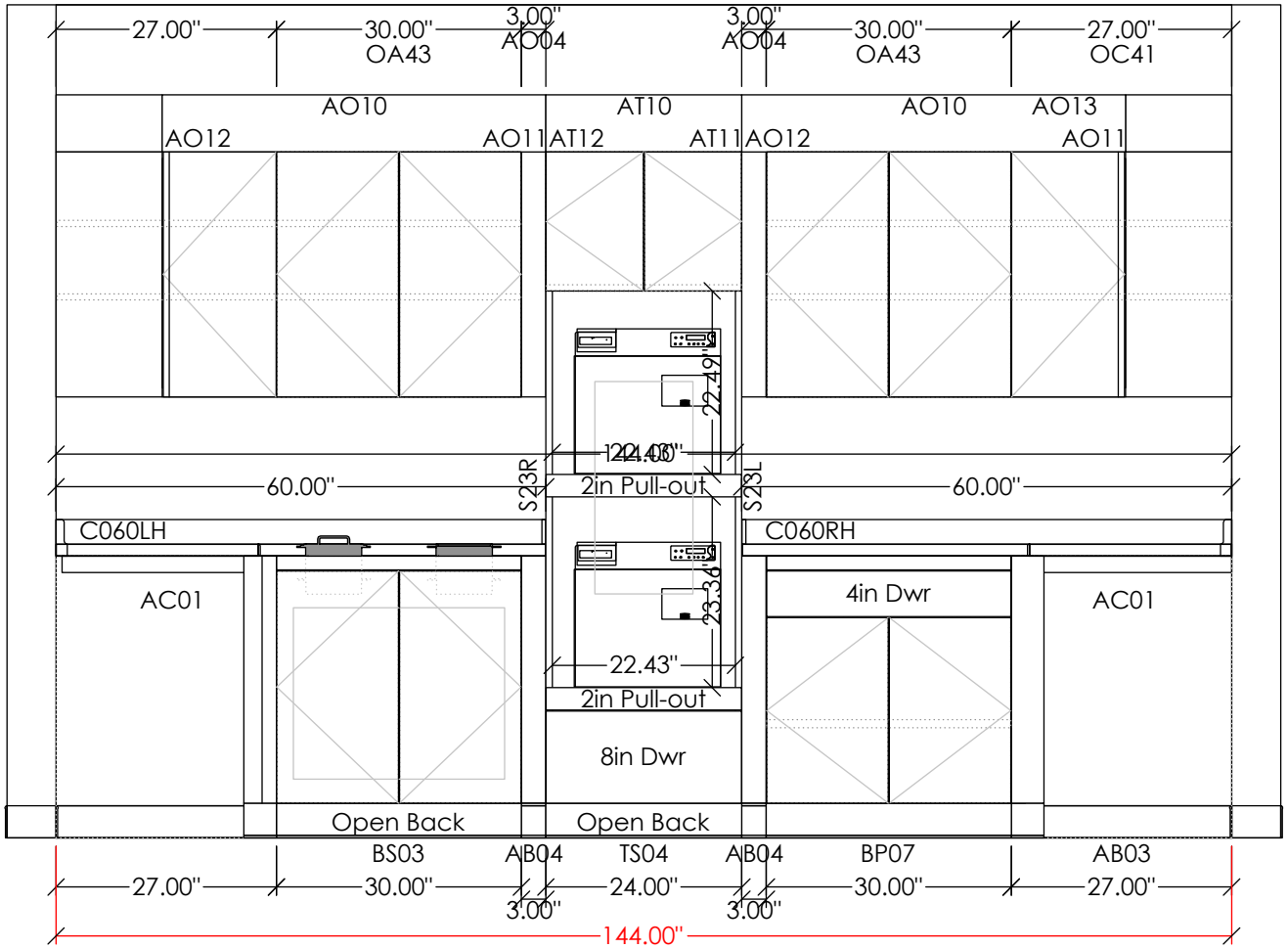

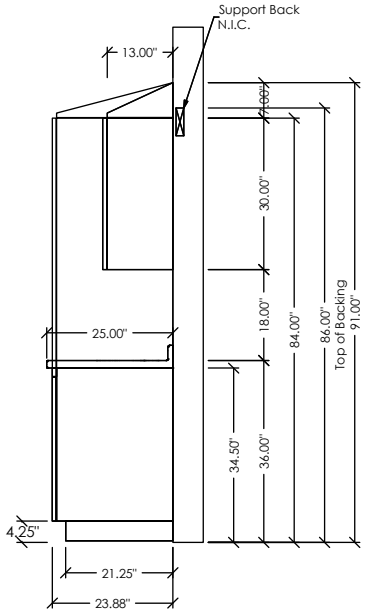

Sterilization

See Countertop Detail Sheet: Solid Surface A , Rolled Edge w/ Int BS 1" x 3"

www.midmark.com
design@midmark.com
Phone: 1-800-MIDMARK

Project Name: **Stockbridge Munsee Health & Wellness**		Project #: **MS190938**		Phase #: **01**	Rev: **7**
Base Finish:	100-TBD Woodgrain/Metallic	Tasklight:	None	Top Material:	Solid Surface
Upper Finish:	100-TBD Woodgrain/Metallic	Grommet:	None	Top Color:	TBD Solid Surface
Panel Style:	Serenity Panel	Ultrasonic:	None	Note:	
Handle:	Brushed Nickel TBD	Note:		Sink:	None
Lock:	No Lock	Note:	Field Measurement Required	Faucet:	None

Signed Drawings Required To Process Order

(Signature) **(Date)**

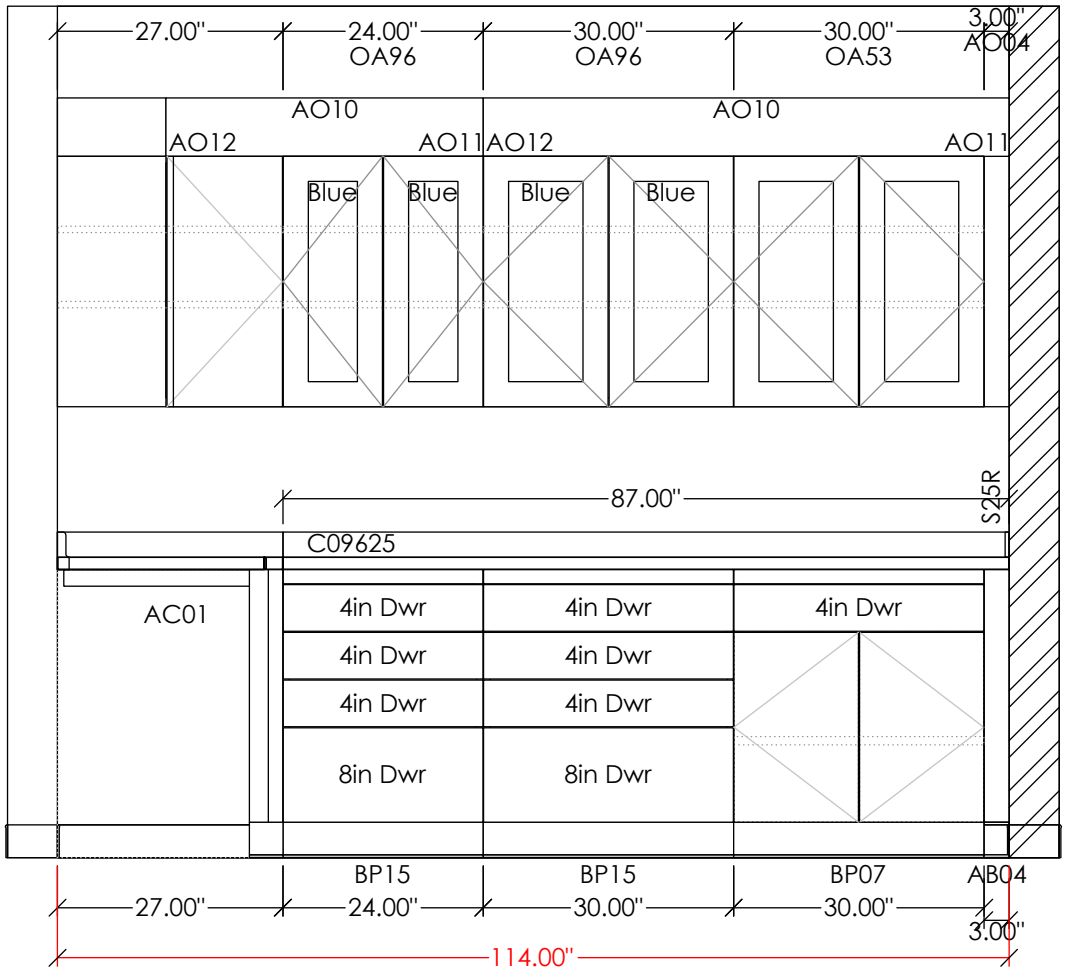

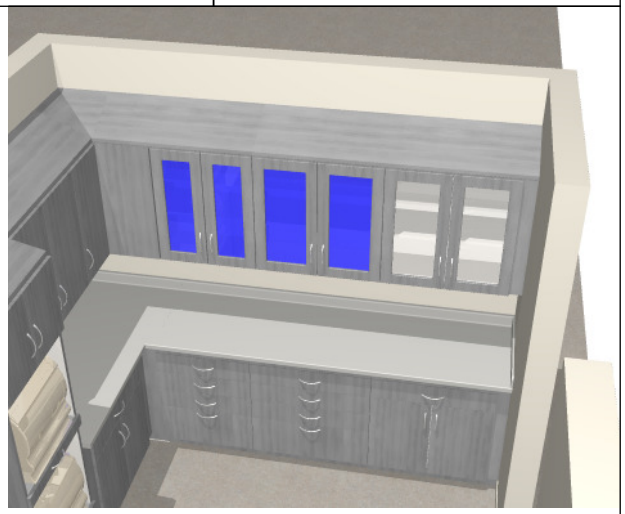

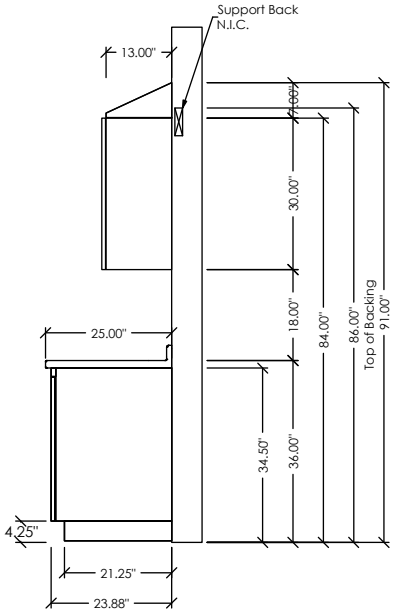

Sterilization

See Countertop Detail Sheet: Solid Surface A , Rolled Edge w/ Int BS 1" x 3"

Countertop Detail Sheet

Solid Surface Detail A
Integrated Backsplash 1" x 3"

Design Considerations:

* Tops that exceed 144" or form an "L" or "U" shape will be sent as multiple pieces and require field seaming by a qualified solid surface fabricator.
* Integrated and undermount sinks and chutes will be attached.
* Sink and faucet cutouts provided only if sink and faucet are purchased from Midmark.
* Tops will be manufactured based on the field measurements provided at the time of order. Tops may be sent long. See elevations for exact countertop width.
* Side splashes next to tall towers and drop down ultrasonic areas will be nonwrapped (see detail drawing).
* See color guide for standard color options. Confirm availability for nonstandard color options. Extended lead time will apply.

Material:

* 1/2" thick solid surface material.

Features:

* Outside corners of solid surface tops will have 3/8" radius.
* Standard countertop overhang for base cabinets is 1/2".
* Integrated solid surface sink will be Cameo White.
* Loose set on side splash available.

Detail drawings:

See Side Elevation

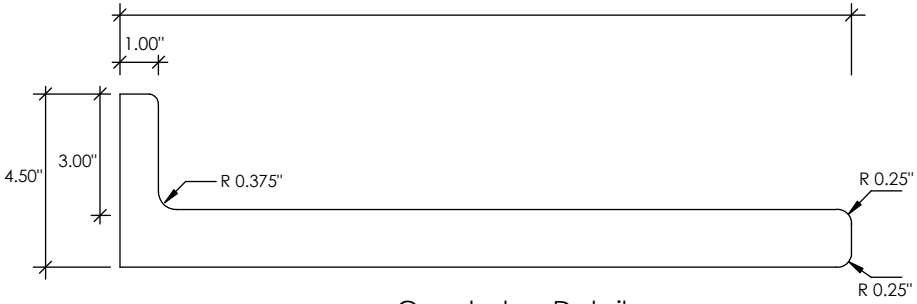

Countertop Detail

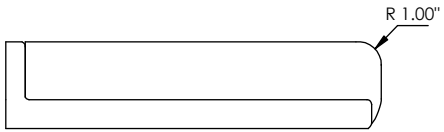

Wrapped Side Splash Detail

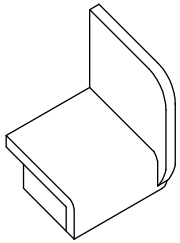

Wrapped Side Splash Front Edge 3D

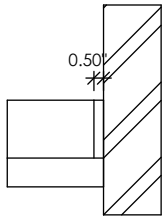

Side Splash Front Detail

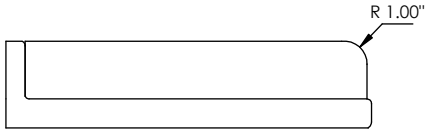

Non Wrapped Side Splash Detail

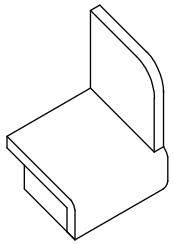

Nonwrapped Side Splash Front Edge 3D

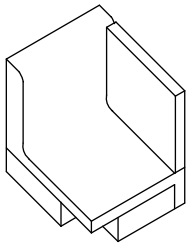

Side Splash & Backsplash 3D

Cabinetry Detail Sheet

Outlet Locations for Equipment

For reference only. Not all cabinet configurations may be used in project quotation.

Equipment Towers

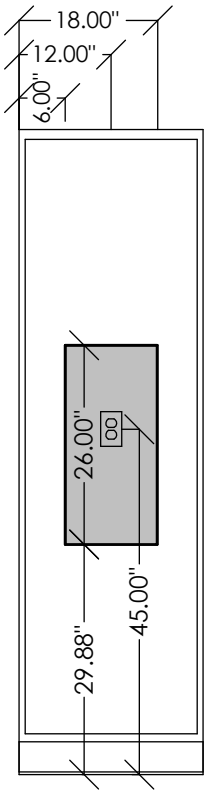

One Outlet
TS01

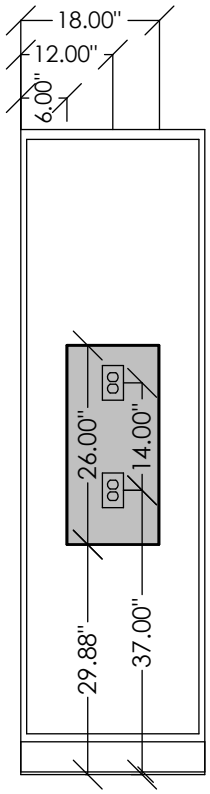

Two Outlets
TS02, TS03, TS04

Outlet Above Countertop

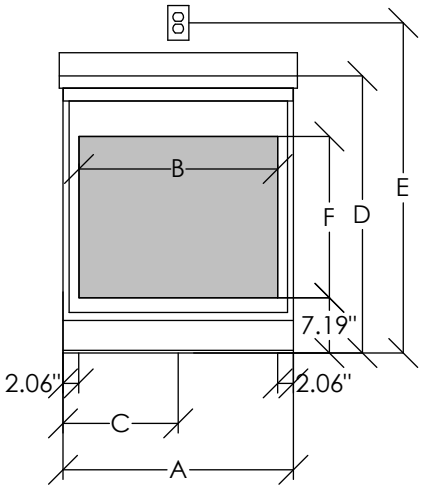

Outlet Inside Cabinet

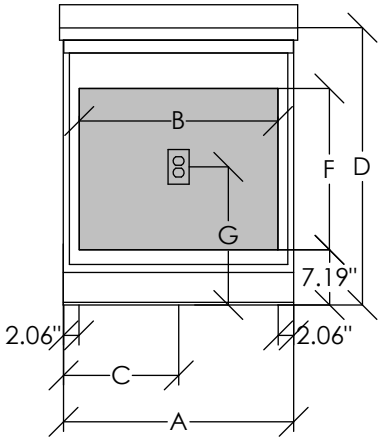

Dimensions Tables:

Width							
A	12"	15"	18"	21"	24"	30"	36"
B	7.88"	10.88"	13.88"	16.88"	19.88"	22.88"	31.88"
C	6"	7.5"	9"	10.5"	12"	15"	18"

Height				
D	42"	36"	34"	30"
E	49"	43"	41"	37"
F	26.71"	21"	18.5"	15.29"
G	18"	18"	18"	18"

Disclaimer:

*Dimensions above are for the cabinet only. Additional cabinets in the room may need to be taken into account for locating outlets.
*A separate (dedicated) circuit is required for sterilizers. Sterilizers should not be connected into an electrical circuit with other appliances or equipment unless circuit is rated for the additional load.
*All local, state, and federal electrical codes are to be followed when installing.
*Midmark does not provide outlet locations for equipment not provided by Midmark. Additional outlets for non Midmark equipment must be confirmed with provider of equipment.

Grommet Detail Sheet

Laminate countertop: Grommet is a separate part; it will be a line item in the pricing.
Corian countertop:
- Part of the countertop = Yes, grommet is part of the countertop; it will not have a line item in the pricing.
- Part of the countertop = No, grommet is a separate part; it will be a line item in the pricing.

Waste Grommet

AC20.0601

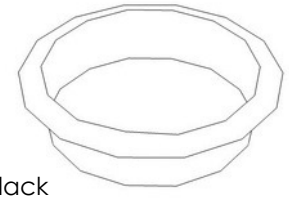

Color: Black
Size: 6in opening
Part of a Corian countertop: No
Includes Trash Can

AC23.0401

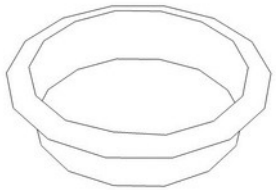

Color: Black
Size: 4in opening
Part of a Corian countertop: No

AC23.0601

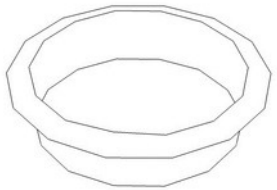

Color: Black
Size: 6in opening
Part of a Corian countertop: No

AC28.0602

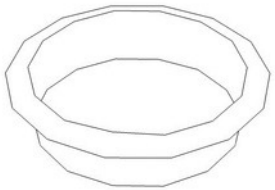

Color: Stainless Steel
Size: 5.375in opening
Part of a Corian countertop: No

Waste Chute

AC21.0406

Color: White
Size: 4in opening
Part of a Corian countertop: Yes

AC21.0606

Color: White
Size: 6in opening
Part of a Corian countertop: Yes

AC22.0406

Color: White
Size: 4in opening
Part of a Corian countertop: Yes

AC22.0606

Color: White
Size: 6in opening
Part of a Corian countertop: Yes

Sharps Drop

AC29.0406

Color: White
Size: 4in opening
Part of a Corian countertop: Yes

Wire Grommet

AC24.0201

Color: Putty
Size: 1.625in opening
Part of a Corian countertop: No

AC25.0101

Color: Black
Size: .5625in opening
Part of a Corian countertop: No

AC26.0101

Color: Putty
Size: .5625in opening
Part of a Corian countertop: No

AC27.0201

Color: Black
Size: 1.625in opening
Part of a Corian countertop: No

CONSTRUCTION CONTRACT

THIS CONTRACT is by and between the **Stockbridge-Munsee Community** ("TRIBE"), for its **Stockbridge-Munsee Health and Wellness Center**, whose address is W12802 County Hwy A, Bowler, WI 54416, and _____ ("CONTRACTOR"), whose address is _____.

WITNESSETH, that the Tribe and the Contractor for consideration provided for herein agree as follows:

I. SCOPE OF WORK

Section 1. Purpose. The general purpose of this Contract is to remodel the Stockbridge-Munsee Health and Wellness Center dental sterilization room (the "Project") on the Stockbridge-Munsee Reservation. The Contractor shall be responsible for services necessary to complete this Project. For this Project, Bonnie Welch shall be the Tribe's primary point of contact with the Contractor.

Section 2. Contract Documents. The contract documents for the Project are incorporated into this Contract by reference and include: the _____, 2021 request for bids, which includes the Infection Control Construction Plan; the Contractor's proposal (dated: _____); other construction plans developed for the Project; and change orders that are made in writing and signed by both parties. If the Contractor discovers a discrepancy, error, or omission in the contract documents, the Contractor shall promptly report it to the Tribe for clarification or correction.

Section 3. Federal Funds. The work on this Project is funded, in whole or in part, with federal funds that the Tribe obtained through a grant agreement from the United States government. The contract provisions outlined in **ATTACHMENT A** shall apply, as applicable, to the Contract in accordance with 2 CFR 200.326, which incorporates Appendix II, Contract Provisions for Non-Federal Entity Contracts under Federal Awards. Such provisions supersede any competing language in the underlying contract documents.

Section 4. Services. Contractor agrees to use a high standard of care and complete all work in accordance with Wisconsin building codes or other standards identified in the contract documents. Except as otherwise specifically stated in the Contract, the Contractor shall provide and pay for all materials, tools, equipment, liability insurance, transportation and all other services and facilities of every nature whatsoever to execute the Project and deliver it complete. The Contractor shall be responsible for such cutting, fitting or patching as necessary for the Project without damaging or endangering the work or the facility. If any design work is done under this Contract, the work shall be considered a work-for-hire.

Section 5. Supervision and Construction Procedures. Contractor shall supervise and direct the work and shall be responsible for job site safety in accordance with OSHA standards. Contractor shall be solely responsible for and have control over construction means and methods. Contractor shall be responsible to Tribe for acts and omissions of Contractor's employees or its subcontractors. The Contractor shall take appropriate measures to prevent damage, injury or loss to persons or property in the event of an emergency. Adjustments to compensation or time may be claimed by the Contractor based on an emergency, except that no adjustment will be made if the emergency was the result of the Contractor's misconduct or negligence.

Section 6. Access. Contractor shall provide the Tribe with access to the work, wherever located. The Tribe agrees to abide by the Contractor's reasonable Project site safety rules.

The Tribe will provide the Contractor with reasonable access to the Health Center facility in order to complete the work. Work must be completed during business hours (Monday to Friday, 8am-4:30pm). Contractor understands that the Tribe will continue its health care operations while this work is being completed and shall use its best efforts to not impede access and to limit disruptions. Any interruption to electrical or other utilities shall be coordinated with the Tribe's contact person prior to the interruption. Any work that may impede the general use of the space, and cannot be removed, shall be flagged and cordoned off by the Contractor. Contractor shall approve work areas prior to work to allow for Tribe to ensure necessary safety provisions are taken.

Section 7. Right to Carry Out Work. If Contractor defaults or persistently fails or neglects to carry out work in accordance with the contract documents, the Tribe, after 10 days' written notice to Contractor and without prejudice to other remedies, may make good such deficiencies and may deduct the reasonable cost thereof from payment then or thereafter due to Contractor.

Section 8. Subcontractors. The Contractor shall require each subcontractor comply with the terms of the Contract Documents for this Project and assume all appropriate obligations and responsibilities for the work thereunder. This provision does not limit or otherwise affect the Contractor's responsibility for the quality of labor, services, and materials furnished by subcontractors and for the acts and omissions of subcontractors.

II. SPECIAL CONDITIONS

Section 1. Contract Times. The Contractor shall begin work on the Project on _____. The contract work, without change orders, shall be completed by _____.

Section 2. Contractor's Insurance. The Contractor shall purchase and maintain insurance for protection from claims under worker's compensation laws, disability benefits laws or other similar employee benefit laws; for damages due to injury, occupational disease, or death of employees; from personal injury claims; and from property damage claims, including loss of use resulting therefrom -- any and all of which may arise out of or result from the Contractor's operations under the Contract. The Contractor's insurance shall be written for not less than any limits of liability specified in the Contract or required under Wisconsin law, whichever is greater, and shall include contractual liability insurance. Liability coverage shall be written on an occurrence basis. The Contractor waives all rights of subrogation in relation to such insurance.

Before starting the work, the Contractor shall file with Tribe certificates of such insurance, acceptable to the Tribe, these certificates shall contain a provision that the coverage afforded under the policies will not be canceled or materially changed during the course of this Contract. The certificate shall be incorporated herein by reference and become a part of this Contract.

Section 3. Site Examination. It is understood that the Contractor has examined the site and is familiar with all conditions that might affect the execution of this Contract and has made provisions therefore in its bid. When the site contains concealed or unknown conditions that differ materially from those indicated in the contract documents, the parties agree that the contract sum or time shall be equitably adjusted.

If, as part of completing the work under this Contract, the Contractor encounters hazardous or toxic materials on the site, the Contractor shall immediately stop work in the affected area, take immediate measures to protect against injury to persons or property and report the condition to the Tribe in writing. The Contractor has no responsibility for such hazardous or toxic materials on the

site unless the Contractor, or someone for whom the Contractor is liable, introduces such materials to the site.

Section 4. Permits and Inspections. Unless otherwise provided in the Contract or construction documents, the Contractor shall be responsible to secure and pay for any required permits, fees and inspections required to properly execute and complete the Project.

Section 5. Cleanup. The Contractor shall keep the premises free from the accumulation of construction rubbish and debris and shall be responsible for the proper disposal of waste materials. At the completion of the work, the Contractor shall remove all construction materials and leave the premises "broom clean."

Section 6. Indian Preference in Hiring. The bidder shall agree that, to the greatest extent feasible, Indian persons will be given preference if opportunities for training and employment in connection with this work arise. The Contractor agrees to give preference to qualified Stockbridge-Munsee Tribal Members in hiring employees for any new positions that may be required in order to complete the Contract.

Section 7. Prevailing Wage Rates. The Contractor is required to pay its employees not less than the Tribe's prevailing wage rates if applicable where such tribal wage rates supersede federal prevailing wages (Davis-Bacon Act wage rates). If there is no applicable tribal prevailing wage rate, then federal prevailing wages will apply.

Section 8. Performance and Payment Bonds. Not applicable.

Section 9. Liquidated Damages. Not applicable.

Section 10. Sales and Use Tax Exemption. As a federally-recognized Indian tribe, the Tribe is exempt from Wisconsin sales and use tax. This Project is on land held in trust by the United States of America on the Tribe's behalf, so all material used for the construction of the Project shall be shipped free on board (FOB) to the trust land and be exempt from sales and use tax.

III. CONTRACT SUM

Section 1. Contract Sum. The Tribe shall pay the Contractor, subject to adjustments, the sum of _____ ($_____). The contract sum shall not exceed this cost without express written permission from the Tribe.

IV. PAYMENTS

Section 1. Application for Payment. Payments shall be payable upon application for payment from Contractor. Applications for progress payments shall be based on work completed. Each application for payment shall be accompanied by support for the requested payment. No payments shall constitute a waiver of the Tribe's right to withhold payment for any grounds stated in this Contract, nor shall any payment estop the Tribe from recovering from the Contractor any money paid for work that subsequently proves to be defective or otherwise not in conformity with the Contract.

Section 2. Payments Withheld. The Tribe, in its discretion, may withhold payment in whole or in part, as it deems necessary to protect against: a) defective work not remedied; b) claims filed or reasonable evidence indicating probable filing of claims; c) failure of the Contractor to make payments promptly to subcontractors or for labor, materials or equipment; d) reasonable probability

that the work will not be completed for the unpaid balance of the contract sum; e) damage to other contractors; f) reasonable probability that the work will not be completed within the contract time; or g) unsatisfactory performance or execution of the work by the Contractor. Regardless of the above, all progress payments shall be subject to a retainage of ten percent (10%). This retention is held to ensure successful completion of the work.

Section 3. Liens and Encumbrances. Submission of any application for payment by the Contractor shall constitute a warranty and guarantee by the Contractor that title to all work, materials and equipment covered by the application for payment, is free and clear of all liens, claims, security interests or encumbrances. Such lien releases may be conditional on payment. Nothing contained herein shall be construed to modify or amend the risks assumed by the Contractor anywhere in the contract documents.

Section 4. Change Order. Changes in the work after execution of the Contract will typically be handled through written change orders. A change order is a written document that is signed by both Tribe and Contractor stating their agreement upon the following: the change to the identified contract work and the amount of adjustment, if any, to the contract sum and contract time. No changes to the contract sum or contract time will be honored without an approved change order or an amendment to the Contract.

Section 5. Completion and Final Payment. The final payment shall be made following final acceptance of the work. Upon completion, the Contractor shall provide notice that it has fully performed the work under the Contract, not including any responsibilities that extend past the date of final completion. Also, the Contractor shall submit the final application for payment to the Tribe.

The parties shall schedule and complete a joint inspection of the job site. As part of this inspection, a punch list will be prepared as to all incomplete and unsatisfactory items. It is hereby understood that the decision as to whether the Project or any particular item is complete and satisfactory is reserved solely to the Tribe. When the Contractor feels that the items on the punch list are satisfactorily corrected or completed, notice will again be given the Tribe and another joint inspection shall be made. This method shall be used for further inspections until all items are satisfactorily completed.

V. WARRANTY AND CORRECTIONS

Section 1. Warranty. Contractor warrants that materials and equipment furnished under the Contract will be of good quality and new, unless otherwise required or permitted by the contract documents; that the Project will be free from defects; and that the Project will conform to the requirements of the contract documents. Work not conforming to the contract documents, including substitutions not properly authorized, may be considered defective. Contractor's warranty excludes remedy for damage or defect caused by abuse, modifications not executed by Contractor, improper of insufficient maintenance, improper operation, or normal wear and tear. The Contractor shall provide the Tribe with all warranties and documentation applicable to the equipment, materials and systems installed.

Section 2. Correction of Work. Contractor shall promptly correct work rejected by Tribe or failing to conform to the requirements of the contract documents whenever discovered during the Project. Costs of correcting such work and/or replacing damaged materials and equipment, including additional testing, inspections, and expenses made necessary thereby, shall be at Contractor's expense.

In addition, Contractor covenants and agrees to remedy without cost to the Tribe any defects, excepting normal wear and tear and those by reasons of force majeure, that may arise within two (2) years from the date of final completion.

VI. OTHER CONDITIONS AND PROVISIONS

Section 1. Employment Status of Contractor. It is understood and agreed by both parties the Contractor is and will be considered to be an independent contractor. The Contractor acknowledges that it is operating as an independent contractor and will be completely responsible for required insurance, worker compensation and withholding for payroll taxes for itself and its employees.

Section 2. Governing Law. This Contract shall be construed in accordance with the laws of the Stockbridge-Munsee Community and, in absence of tribal law on point, Wisconsin law.

Section 3. Tribal Bid Policy. The parties understand and agree that this Contract may not be held valid when the Tribe's Competitive Construction Bid Policy is applicable to the contract work, but was violated by either party.

Section 4. Notice. All notices required or authorized to be served shall be in person or by first class mail to the address above or the last business address known by the party giving notice.

Section 5. Indemnification. Contractor agrees to indemnify and hold the Tribe and its employees and agents harmless from claims, damages, losses and expenses arising out of or resulting from the performance of the Project, but only to the extent caused by the negligent or willful acts or omissions of the Contractor, subcontractor or anyone for whose acts they may be liable. This indemnity obligation shall not be limited as to the amount or type of damages, compensation or benefits payable by or for the Contractor or subcontractors under workers' compensation acts, disability benefit acts or other employee benefit acts.

Section 6. Assignment. Neither this Contract nor any part thereof shall be assigned to a third party without prior authorization, in writing, from the Tribe.

Section 7. Integration. This Contract and any exhibits, attachments and documents incorporated by reference constitute the entire agreement and understanding between the parties hereto and supersedes any and all prior agreements and understandings, oral or written, relating to the subject matter hereof. This Contract shall control when there is any conflict between the provisions of it and any exhibit, attachment or incorporated document.

Section 8. Severability. Any part of this Contract that is held void or unenforceable shall be stricken and all remaining provisions shall continue to valid and binding.

Section 9. Termination. The Contractor may terminate the Contract if work is stopped for a period of 30 consecutive days through no act or fault of the Contractor. The Contractor shall be equitably compensated for work completed prior to this termination.

The Owner may terminate the Contract for cause (e.g., if the Contractor fails to supply properly skilled workers or proper materials or otherwise substantially breaches the contact documents) or for convenience. If the Owner terminates the Contract for convenience, the Contractor is entitled to payment for work executed and costs incurred due to such termination. However, if Owner terminates the Contract for cause, the Contractor is not entitled to receive further payment until the work is completed. Owner shall notify Contractor in writing of its plan to terminate the contract for cause, and allow Contractor a period of seven (7) days to cure the matter to Owner's reasonable satisfaction. If the unpaid balance of the contract sum exceeds the actual cost of finishing the work, including damages incurred by the Owner, the excess shall be paid by Contractor to Owner. This obligation survives the termination of this Contract.

Section 10. Electronic Signatures. The parties agree the contract documents may be executed and delivered by electronic means and such electronic signatures shall have the same effect as an original executed document.

TRIBE:

BY: _____

Tribal President or Vice-President

DATE: _____

CONTRACTOR:

BY: _____

_____

Print name and title

DATE: _____

ATTACHMENT A
FEDERAL FUNDS CONTRACT PROVISIONS

1. **Equal Employment Opportunity (if Contract is for construction).**

   It is not a violation of the equal opportunity clause to provide preference to Indians living on or near an Indian reservation for work on or near an Indian reservation per the exceptions in 41 CFR 60-1.5 (a)(7).
   (1) The contractor will not discriminate against any employee or applicant for employment because of race, color, religion, sex, sexual orientation, gender identity, or national origin. The contractor will take affirmative action to ensure that applicants are employed, and that employees are treated during employment without regard to their race, color, religion, sex, sexual orientation, gender identity, or national origin. Such action shall include, but not be limited to the following: Employment, upgrading, demotion, or transfer; recruitment or recruitment advertising; layoff or termination; rates of pay or other forms of compensation; and selection for training, including apprenticeship. The contractor agrees to post in conspicuous places, available to employees and applicants for employment, notices to be provided setting forth the provisions of this nondiscrimination clause.
   (2) The contractor will, in all solicitations or advertisements for employees placed by or on behalf of the contractor, state that all qualified applicants will receive consideration for employment without regard to race, color, religion, sex, sexual orientation, gender identity, or national origin.
   (3) The contractor will not discharge or in any other manner discriminate against any employee or applicant for employment because such employee or applicant has inquired about, discussed, or disclosed the compensation of the employee or applicant or another employee or applicant. This provision shall not apply to instances in which an employee who has access to the compensation information of other employees or applicants as a part of such employee's essential job functions discloses the compensation of such other employees or applicants to individuals who do not otherwise have access to such information, unless such disclosure is in response to a formal complaint or charge, in furtherance of an investigation, proceeding, hearing, or action, including an investigation conducted by the employer, or is consistent with the contractor's legal duty to furnish information.
   (4) The contractor will send to each labor union or representative of workers with which he has a collective bargaining agreement or other contract or understanding, a notice to be provided advising the said labor union or workers' representatives of the contractor's commitments under this section, and shall post copies of the notice in conspicuous places available to employees and applicants for employment.
   (5) The contractor will comply with all provisions of Executive Order 11246 of September 24, 1965, and of the rules, regulations, and relevant orders of the Secretary of Labor.
   (6) The contractor will furnish all information and reports required by Executive Order 11246 of September 24, 1965, and by rules, regulations, and orders of the Secretary of Labor, or pursuant thereto, and will permit access to his books, records, and accounts by the administering agency and the Secretary of Labor for purposes of investigation to ascertain compliance with such rules, regulations, and orders.
   (7) In the event of the contractor's noncompliance with the nondiscrimination clauses of this contract or with any of the said rules, regulations, or orders, this contract may be canceled, terminated, or suspended in whole or in part and the contractor may be declared ineligible for further Government contracts or federally assisted construction contracts in accordance with procedures authorized in Executive Order 11246 of September 24, 1965, and such other sanctions may be imposed and remedies invoked as provided in Executive Order 11246 of September 24, 1965, or by rule, regulation, or order of the Secretary of Labor, or as otherwise provided by law.
   (8) The contractor will include the portion of the sentence immediately preceding

paragraph (1) and the provisions of paragraphs (1) through (8) in every subcontract or purchase order unless exempted by rules, regulations, or orders of the Secretary of Labor issued pursuant to section 204 of Executive Order 11246 of September 24, 1965, so that such provisions will be binding upon each subcontractor or vendor. The contractor will take such action with respect to any subcontract or purchase order as the administering agency may direct as a means of enforcing such provisions, including sanctions for noncompliance: Provided, however, that in the event a contractor becomes involved in, or is threatened with, litigation with a subcontractor or vendor as a result of such direction by the administering agency, the contractor may request the United States to enter into such litigation to protect the interests of the United States.

The applicant further agrees that it will be bound by the above equal opportunity clause with respect to its own employment practices when it participates in federally assisted construction work: Provided, That if the applicant so participating is a State or local government, the above equal opportunity clause is not applicable to any agency, instrumentality or subdivision of such government which does not participate in work on or under the contract.

The applicant agrees that it will assist and cooperate actively with the administering agency and the Secretary of Labor in obtaining the compliance of contractors and subcontractors with the equal opportunity clause and the rules, regulations, and relevant orders of the Secretary of Labor, that it will furnish the administering agency and the Secretary of Labor such information as they may require for the supervision of such compliance, and that it will otherwise assist the administering agency in the discharge of the agency's primary responsibility for securing compliance.

The applicant further agrees that it will refrain from entering into any contract or contract modification subject to Executive Order 11246 of September 24, 1965, with a contractor debarred from, or who has not demonstrated eligibility for, Government contracts and federally assisted construction contracts pursuant to the Executive Order and will carry out such sanctions and penalties for violation of the equal opportunity clause as may be imposed upon contractors and subcontractors by the administering agency or the Secretary of Labor pursuant to Part II, Subpart D of the Executive Order. In addition, the applicant agrees that if it fails or refuses to comply with these undertakings, the administering agency may take any or all of the following actions: Cancel, terminate, or suspend in whole or in part this grant (contract, loan, insurance, guarantee); refrain from extending any further assistance to the applicant under the program with respect to which the failure or refund occurred until satisfactory assurance of future compliance has been received from such applicant; and refer the case to the Department of Justice for appropriate legal proceedings.

2. **Davis-Bacon Act (if Contract for construction is more than $2,000).**

   a. Davis-Bacon prevailing wage rates may be superseded by tribal prevailing wage rates, see Section II.7 of the Contract.

   b. All transactions regarding this Contract including the actions of the contractor and lower tier subcontractors shall be in compliance with the Davis-Bacon Act (40 U.S.C. §§3141- 3144, and §§3146-3148) and the requirements of 29 CFR part 5 as may be applicable.

   c. Contractors are required to pay wages to laborers and mechanics at a rate not less than the prevailing wages specified in a wage determination made by the Secretary of Labor. Additionally, contractors are required to pay wages not less than once a week.

3. **Copeland Anti-Kickback Act (if Contract for construction is more than $2,000).**

   a. *Contractor*. The contractor shall comply with 18 U.S.C. §874, 40 U.S.C. §3145, and the requirements of 29 CFR. part 3 as may be applicable, which are incorporated by reference into this contract.

   b. *Subcontracts*. The contractor or subcontractor shall insert in any subcontracts the clause above and

such other clauses as the awarding federal agency may require as well as a clause requiring the subcontractors to include these clauses in any lower tier subcontracts. The prime contractor shall be responsible for the compliance by any subcontractor or lower tier subcontractor with all of these contract clauses.

c. *Breach*. A breach of the contract clauses above may be grounds for termination of the contract, and for debarment as a contractor and subcontractor as provided in 29 CFR. 5.12.

4. **Rights to Inventions (if Contract is with non-profit or small business).** If the Contractor is a small business firm or nonprofit organization and enters into a Contract with the Tribe that is a "funding agreement" and includes provisions regarding the substitution of parties, assignment or performance of experimental, developmental, or research work, then the Tribe will comply with the requirements of 37 C.F.R. part 401 (Rights to Inventions Made by Nonprofit Organizations and Small Business Firms Under Government Grants, Contracts and Cooperative Agreements), and any implementing regulations issued.

5. **Debarment and Suspension.**

a. This contract is a covered transaction for purposes of 2 CFR part 180 and 2 CFR parts 300-5999, as applicable. As such, the contractor certifies that none of the contractor's principals or its affiliates are excluded or disqualified (see definitions under 2 CFR part 180) and that the Contractor, as well as its subcontractors, shall comply with these regulations on the federal government-wide debarment and suspension system.

b. This certification is a material representation of fact relied upon by the Tribe. If it is later determined that the contractor did not comply with 2 CFR part 180, subpart C, and agency-specific requirements, in addition to remedies available to the Tribe, the federal government may pursue available remedies, including but not limited to suspension and/or debarment.

6. **Access to Records.**

a. The contractor agrees to provide the Tribe, the awarding federal agency, the Comptroller General of the United States, or any of their authorized representatives access to any books, documents, papers, and records of the contractor which are directly pertinent to this contract for the purposes of making audits, examinations, excerpts, and transcriptions.

b. The contractor agrees to permit any of the foregoing parties to reproduce by any means whatsoever or to copy excerpts and transcriptions as reasonably needed.

c. The contractor agrees to provide the awarding agency access to construction or other work sites pertaining to the work being completed under the contract.

d. In compliance with the Disaster Recovery Act of 2018, the Tribe and the contractor acknowledge and agree that no language in this contract is intended to prohibit audits or internal reviews by the FEMA Administrator or the Comptroller General of the United States.

7. **Contract Changes or Modifications**. Changes in the work after execution of the Contract will typically be handled through amendments to the Contract or written change orders. Such documents shall be signed by both Tribe and contractor and contain: the change to the identified contract work and the amount of adjustment, if any, to the contract sum and contract time. No changes to the contract sum or contract time will be honored without an approved change order or an amendment to the Contract.

8. **Federal Agency Seal, Logo, and Flags.** The contractor shall not use the awarding federal agency's seal(s), logos, crests, or reproductions of flags or likenesses of

agency officials without specific pre-approval.

9. **Compliance with Federal Law, Regulations, and Executive Orders.** This is an acknowledgement that federal financial assistance will be used to fund all or a portion of the contract. The contractor will comply with all applicable federal law, regulations, executive orders, agency policies, procedures, and directives.

10. **No Obligation by Federal Government.** The federal government is not a party to this Contract and is not subject to any obligations or liabilities to the Tribe, contractor, or any other party pertaining to any matter resulting from the Contract.

11. **Program Fraud and False or Fraudulent Statements.** The Contractor acknowledges that 31 U.S.C. Chap. 38 (Administrative Remedies for False Claims and Statements) applies to the Contractor's actions pertaining to this Contract.

12. **Seat Belts, Texting and Driving**. Contractor and its employees, subcontractors and agents shall use seat belts and shall not engage in text messaging while driving when performing services under this Contract.

"General Decision Number: WI20210011 04/09/2021

Superseded General Decision Number: WI20200011

State: Wisconsin

Construction Type: Building

Counties: Adams, Ashland, Barron, Bayfield, Buffalo, Burnett, Clark, Columbia, Crawford, Dodge, Door, Dunn, Florence, Fond Du Lac, Forest, Grant, Green, Green Lake, Iowa, Iron, Jackson, Jefferson, Juneau, Kewaunee, Lafayette, Langlade, Lincoln, Manitowoc, Marinette, Marquette, Menominee, Monroe, Oconto, Oneida, Pepin, Polk, Portage, Price, Richland, Rusk, Sauk, Sawyer, Shawano, Taylor, Trempealeau, Vernon, Vilas, Walworth, Washburn, Waupaca, Waushara and Wood Counties in Wisconsin.

BUILDING CONSTRUCTION PROJECTS (does not include residential construction consisting of single family homes and apartments up to and including 4 stories)

Note: Under Executive Order (EO) 13658, an hourly minimum wage of $10.95 for calendar year 2021 applies to all contracts subject to the Davis-Bacon Act for which the contract is awarded (and any solicitation was issued) on or after January 1, 2015. If this contract is covered by the EO, the contractor must pay all workers in any classification listed on this wage determination at least $10.95 per hour (or the applicable wage rate listed on this wage determination, if it is higher) for all hours spent performing on the contract in calendar year 2021. If this contract is covered by the EO and a classification considered necessary for performance of work on the contract does not appear on this wage determination, the contractor must pay workers in that classification at least the wage rate determined through the conformance process set forth in 29 CFR 5.5(a)(1)(ii) (or the EO minimum wage rate,if it is higher than the conformed wage rate). The EO minimum wage rate will be adjusted annually. Please note that this EO applies to the above-mentioned types of contracts entered into by the federal government that are subject to the Davis-Bacon Act itself, but it does not apply to contracts subject only to the Davis-Bacon Related Acts, including those set forth at 29 CFR 5.1(a)(2)-(60). Additional information on contractor requirements and worker protections under the EO is available at www.dol.gov/whd/govcontracts.

Modification Number	Publication Date
0	01/01/2021
1	03/12/2021
2	03/19/2021
3	04/09/2021

ASBE0019-002 06/01/2020

COLUMBIA, CRAWFORD, DODGE, GRANT, GREEN, IOWA, JEFFERSON, JUNEAU, LAFAYETTE, MARQUETTE, MONROE, RICHLAND, SAULK, VERNON, AND WALWORTH COUNTIES

	Rates	Fringes
Asbestos Workers/Insulator		

(Includes the application of
all insulating materials,
protective coverings,
coatings, and finishes to all
types of mechanical systems).....$ 37.43 34.65

ASBE0034-005 06/01/2020

BARRON, BUFFALO, DUNN, AND POLK COUNTIES

	Rates	Fringes
Asbestos Workers/Insulator (Includes the application of all insulating materials; protective coatings, coverings, and finishes to all types of mechanical systems. Does not include asbestos removal).....	$ 39.25	34.90

ASBE0049-003 06/01/2020

ASHLAND, BAYFIELD, BURNETT, IRON, PEPIN, SAWYER, AND WASHBURN COUNTIES

	Rates	Fringes
Asbestos Workers/Insulator (Includes the application of all insulating materials; protective coverings, coatings, and finishes to all types of mechanical systems).....	$ 30.67	27.65

ASBE0127-002 06/01/2020

ADAMS, CLARK, DOOR, FLORENCE, FOND DU LAC, FOREST, GREEN LAKE, JACKSON, KEWAUNEE, LINCOLN, MANITOWOC, MARINETTE, MENOMINEE, OCONTO, ONEIDA, PORTAGE, PRICE, RUSK, SHAWANO, TAYLOR, TREMMPEALEAU, VILAS, WAUPACA, WAUSHARA, AND WOOD COUNTIES

	Rates	Fringes
Heat and Frost Insulator (Includes the application of all insulating materials, protective coverings, coatings and finishes to all types of mechanical systems; and the application of firestopping material in walls, floors, ceilings).....	$ 32.74	24.56

ASBE0205-005 06/01/1998

ADAMS, CLARK, DOOR, FLORENCE, FOND DU LAC, FOREST, GREEN LAKE, JACKSON, KEWAUNEE, LANGLADE, LINCOLN, MANITOWOC, MARINETTE, MENOMINEE, OCONTO, ONEIDA, PORTAGE, PRICE, RUSK, SHAWANO, TAYLOR, TREMPEALEAU, VILAS, WAUPACA, WAUSHARA, AND WOOD COUNTIES

	Rates	Fringes

Asbestos Removal
worker/hazardous material
handler (Includes
preparation, wetting,
stripping, removal, scrapping
vacuuming, bagging and
disposing of all insulation
materials from mechanical
systems whether they contain
asbestos or not).....$ 16.56 3.10

ASBE0205-008 06/01/1999

COLUMBIA, CRAWFORD, DODGE, GRANT, GREEN, IOWA, JEFFERSON, JUNEAU, LAFAYETTE, MARQUETTE, MONROE, RICHLAND, SAULK, VERNON, AND WALWORTH COUNTIES

	Rates	Fringes
Asbestos Removal worker/hazardous material handler (Includes preparation, wetting, stripping, removal, scrapping, vacuuming, bagging and disposing of all insulation materials from mechanical systems, whether they contain asbestos or not)...	$ 16.55	3.45

ASBE0205-012 05/01/1998

ASHLAND, BAYFIELD, BURNETT, IRON, PEPIN, SAWYER, AND WASHBURN COUNTIES

	Rates	Fringes
HAZARDOUS MATERIAL HANDLER (Includes preparation, wetting, stripping, removal, scrapping, vacuuming, bagging and disposing of all insulation materials from mechanical systems, whether they contain asbestos or not)...	$ 19.72	3.69

ASBE0205-013 05/01/1998

BARRON, BUFFALO, AND POLK COUNTIES

	Rates	Fringes
Asbestos Removal worker/hazardous material handler (Includes preparation, wetting, stripping, removal, scrapping, vacuuming, bagging and disposing of all insulation materials from mechanical systems whether they contain asbestos or not)...	$ 19.72	3.69

BOIL0107-001 01/01/2017

	Rates	Fringes
BOILERMAKER		
Boilermaker	$ 35.65	29.89
Small Boiler Repair (under 25,000 lbs/hr)	$ 26.91	16.00

BRWI0001-003 06/01/2020

CRAWFORD,JUNEAU, MONROE,TREMPEALEAU, AND VERNON COUNTIES

	Rates	Fringes
Bricklayer & Tile Setter	$ 35.31	24.77

BRWI0002-003 06/01/2020

ASHLAND, BURNETT, IRON, WASHBURN

	Rates	Fringes
BRICKLAYER		
Bricklayer, Tile Setter	$ 42.77	23.47
Cement Mason/Concrete Finisher	$ 40.63	23.47

BRWI0002-004 06/01/2020

BAYFIELD COUNTY

	Rates	Fringes
BRICKLAYER		
Bricklayer & Tile Setter	$ 42.77	23.47

BRWI0003-001 06/01/2020

DOOR, KEWAUNEE, FLORENCE, FOND DU LAC, GREEN LAKE, MANITOWOC, MARINETTE, MARQUETTE, OCONTO, SHAWANO, WAUPACA, AND WAUSHARA COUNTIES

	Rates	Fringes
BRICKLAYER		
Bricklayer, Cement Mason, Tile Setter	$ 35.68	24.40

BRWI0004-003 03/08/2021

WALWORTH COUNTY

	Rates	Fringes
BRICKLAYER	$ 38.43	25.10
CEMENT MASON/CONCRETE FINISHER	$ 36.41	25.53
TILE SETTER	$ 33.93	25.53

BRWI0006-001 06/01/2020

ADAMS, CLARK, FOREST, LANGLADE, LINCOLN, MENOMINEE, ONEIDA, PORTAGE, TAYLOR, VILAS AND WOOD COUNTIES

	Rates	Fringes
BRICKLAYER		
Bricklayer,Cement Mason,Tile Setter	$ 36.60	23.48

BRWI0006-004 06/01/2020

PRICE COUNTY

	Rates	Fringes
Bricklayer & Tile Setter	$ 36.60	23.48

BRWI0007-003 06/01/2020

GREEN AND LAFAYETTE COUNTIES

	Rates	Fringes
Bricklayer & Tile Setter	$ 37.07	24.72

BRWI0013-003 06/01/2020

GRANT, IOWA, AND RICHLAND COUNTIES

	Rates	Fringes
Bricklayer	$ 35.56	24.23
Tile Layer	$ 36.42	22.70

BRWI0019-004 06/01/2020

BARRON, BURNETT (Southern half), DUNN, PEPIN, POLK, RUSK, AND WASHBURN (Southern half) COUNTIES

	Rates	Fringes
BRICKLAYER		
Bricklayer, Cement Mason, Tile Layer	$ 34.86	25.22

BRWI0019-005 06/01/2020

SAWYER COUNTY

	Rates	Fringes
Bricklayer & Tile Setter	$ 34.86	25.22

BRWI0021-001 06/01/2020

DODGE AND JEFFERSON COUNTIES

	Rates	Fringes
BRICKLAYER		
Bricklayer, Cement Mason, Tile Layer	$ 36.80	24.97

BRWI0034-001 06/01/2020

COLUMBIA AND SAUK COUNTIES

	Rates	Fringes
BRICKLAYER		
Bricklayer, Cement Mason, Tile Layer	$ 37.36	24.43

CARP0087-003 05/01/2016

BURNETT (West of highway 48) AND POLK(West of Highways 35, 48 & 65) COUNTIES

	Rates	Fringes
CARPENTER (Including Drywall Hanging, Acoustical work)	$ 31.69	17.71

CARP0252-005 06/01/2016

ADAMS, BARRON, BAYFIELD (Eastern 2/3), BUFALO, BURNETT (East of Hwy 48), CLARK, COLUMBIA, CRAWFORD, DODGE, DOOR, DUNN, FLORENCE (Except area bordering Michigan), FOND DU LAC, FOREST, GRANT, GREEN, GREEN LAKE, IOWA, IRON, JACKSON, JEFFERSON, KEWAUNEE, LAFAYETTE, MANITOWOC, MARINETTE (Except N.E. corner), MARQUETTE, MENOMINEE, MONROE, OCONTO, ONEIDA, POLK (East of Hwy 35, 48, 65), PORTAGE, PRICE, RICHLAND, RUSK, SAUK, SAWYER, SHAWANO, TAYLOR, TREMPEALEAU, VERNON, VILAS, WALWORTH, WASHBURN, WAUPACA, WAUSHARA, AND WOOD COUNTIES

	Rates	Fringes
CARPENTER (Including Drywall Hanging, Acoustical work)	$ 33.56	18.00
MILLWRIGHT	$ 35.08	18.35

CARP0252-009 07/02/2012

ASHLAND COUNTY

	Rates	Fringes
CABINET INSTALLER (Including Drywall Hanging & Acoustical Work)	$ 30.48	05.80
MILLWRIGHT	$ 32.11	15.80

CARP0361-006 05/01/2018

BAYFIELD COUNTY (West of Hwy 63)

	Rates	Fringes
Carpenters: (Including Drywall Hanging, Acoustical work)	$ 31.10	19.03

CARP1348-006 05/01/2020

BAYFIELD COUNTY (Western 1/3)

	Rates	Fringes

MILLWRIGHT.....$ 35.75 21.30

ELEC0014-001 06/14/2020

ASHLAND, BARRON, BAYFIELD, BUFFALO, BURNETT, CHIPPEWA, CLARK (Except Colby, Fremont, Lynn, Maryville, Sherman, Sherwood, Unity), CRAWFORD, DUNN, GRANT, IRON, JACKSON, MONROE, PEPIN, POLK, PRICE, RICHLAND, RUSK, SAWYER, TAYLOR, TREMPEALEAU, VERNON, AND WASHBURN COUNTIES

	Rates	Fringes
ELECTRICIAN.....	$ 35.98	20.98

ELEC0014-005 07/05/2020

	Rates	Fringes
Teledata System Installer		
Installer/Technician.....	$ 27.75	15.14

Low voltage construction, installation, maintenance and removal of teledata facilities (voice, data, and video) including outside plant, telephone and data inside wire, interconnect, terminal equipment, central offices, PABX, fiber optic cable and equipment, micro waves, V-SAT, bypass, CATV, WAN (wide area networks), LAN (local area networks), and ISDN (integrated systems digital network).

ELEC0158-007 06/01/2020

DOOR, KEWAUNEE, MANITOWOC (except Schleswig), MARINETTE(Wausuakee and area South thereof), OCONTO, MENOMINEE (East of a ine 6 miles West of the West boundary of Oconto County), SHAWANO (Except Area North of Townships of Aniwa and Hutchins) COUNTIES

	Rates	Fringes
Electricians:.....	$ 34.77	29.75%+10.26

ELEC0159-001 08/02/2020

COLUMBIA, DODGE (West of Hwy 26 except Chester and Emmet Twps), GREEN LAKE COUNTY (Except Townships of Berlin, Seneca & St. Marie), IOWA, MARQUETTE COUNTY (Except Townships of Neshkoka, Crystal Lake, Newton, and Springfield), AND SAUK COUNTIES

	Rates	Fringes
Electricians:.....	$ 41.86	22.67

ELEC0219-006 06/01/2019

FLORENCE COUNTY (Townships of Aurora, Commonwealth, Fern, Florence and Homestead) AND MARINETTE COUNTY (Township of Niagara)

	Rates	Fringes

ELECTRICIAN
Electrical contracts over
$180,000.....$ 33.94 21.80
Electrical contracts under
$180,000.....$ 31.75 21.73

ELEC0388-004 06/01/2020

ADAMS, CLARK (Colby, Freemont, Lynn, Mayville, Sherman, Sherwood, Unity), FOREST, JUNEAU, LANGLADE, LINCOLN, MARINETTE (Beecher, Dunbar, Goodman & Pembine), MENOMINEE (Area West of a line 6 miles West of the West boundary of Oconto County), ONEIDA, PORTAGE, SHAWANO (Aniwa and Hutchins), VILAS AND WOOD COUNTIES

	Rates	Fringes
ELECTRICIAN.....	$ 34.85	26%+11.20

ELEC0494-010 06/01/2020

DODGE COUNTY (Area East of Hwy 26 including all of Chester Township, but excluding Emmet Township), FOND DU LAC (except Waupun), AND MANITOWOC (Schleswig) COUNTIES

	Rates	Fringes
ELECTRICIAN.....	$ 36.32	22.51

ELEC0494-014 06/07/2020

DODGE (Area East of Hwy 26 including Chester Twp but excluding Emmet Twp), FOND DU LAC (Except Waupun), AND MANITOWOC (Schleswig) COUNTIES

	Rates	Fringes
Sound & Communications		
Installer.....	$ 21.46	18.52
Technician.....	$ 31.34	20.00

Installation, testing, maintenance, operation and servicing of all sound, intercom, telephone interconnect, closed circuit TV systems, radio systems, background music systems, language laboratories, electronic carillion, antenna distribution systems, clock and program systems and low-voltage systems such as visual nurse call, audio/visual nurse call systems, doctors entrance register systems. Includes all wire and cable carrying audio, visual, data, light and radio frequency signals. Includes the installation of conduit, wiremold, or raceways in existing structures that have been occupied for six months or more where required for the protection of the wire or cable, but does not mean a complete conduit or raceway system. work covered does not include the installation of conduit, wiremold or any raceways in any new construction, or the installation of power supply outlets by means of which external electric power is supplied to any of the foregoing equipment or products

---

ELEC0577-001 06/01/2020

GREEN LAKE (N. Part including Twps of Berlin, St Marie, and Seneca), MARQUETTE (N. part including Twps of Crystal Lake, Neshkoro, Newton, and Springfield), WAUPACA, AND WAUSHARA COUNTIES,

	Rates	Fringes
ELECTRICIAN.....	$ 34.23	29.50%+10.00

ELEC0890-005 06/01/2020

DODGE (Emmet Township only), GREEN, JEFFERSON, LAFAYETTE, AND WALWORTH COUNTIES

	Rates	Fringes
ELECTRICIAN.....	$ 37.41	25.95%+11.11

ENGI0139-004 06/01/2020

	Rates	Fringes
OPERATOR: Power Equipment		
(1) Cranes, Tower Cranes with or w/o attachments over 100 tons; Cranes, tower Cranes with boom, leads and or jib length 176 ft or longer.....	$ 42.92	23.15
(2) Cranes, Tower Cranes with or w/o attachments 100 tons or less; Cranes, Tower Cranes with boom, leads, and or jib lengths 175 ft or less.....	$ 41.67	23.15
(3) Travelling Crane (bridge type).....	$ 39.97	23.15
(4) Hydraulic Crane, 10 tons or less.....	$ 39.44	23.15
(6) Forklift.....	$ 35.84	23.15

HAZARDOUS WASTE PREMIUMS:
EPA Level ""A"" Protection: $3.00 per hour
EPA Level ""B"" Protection: $2.00 per hour
EPA Level ""C"" Protection: $1.00 per hour

IRON0008-012 06/01/2020

CALUMET, DOOR, FOND DU LAC, KEWAUNEE, MANITOWOC, MARINETTE, OCONTO, OUTAGAMI, SHAWANO AND WALWORTH (Northeastern part) COUNTIES

	Rates	Fringes
IRONWORKER.....	$ 37.31	27.62

Paid Holidays: New Year's Day, Memorial Day, July 4th, Labor Day, Thanksgiving Day & Christmas Day.

IRON0383-004 06/01/2020

ADAMS, COLUMBIA, CRAWFORD, DODGE, FLORENCE, FOREST, GRANT, GREENE (Except S.E. tip), GREEN LAKE, IOWA, JEFFERSON, JUNEAU, LAFAYETTE, LANGLADE, MARATHON, MARQUETTE, MENOMINEE, MONROE, PORTAGE, RICHLAND, SAUK, VERNON, WAUPACA, WAUSHARA, AND WOOD COUNTIES

	Rates	Fringes
IRONWORKER	$ 37.10	27.06

IRON0498-007 06/01/2019

GREEN (S.E. 1/3) AND WALWORTH (Except N.E. part) COUNTIES

	Rates	Fringes
IRONWORKER	$ 40.25	40.53

IRON0512-009 06/03/2019

BARRON, BUFFALO, CLARK, DUNN, JACKSON, PEPIN, POLK, RUSK, TAYLOR AND TREMPEALEAU COUNTIES

	Rates	Fringes
IRONWORKER	$ 37.60	29.40

IRON0512-023 06/03/2019

ASHLAND, BAYFIELD, BURNETT, IRON, LINCOLN, ONEIDA, PRICE, SAWYER, VILAS AND WASHBURN COUNTIES

	Rates	Fringes
IRONWORKER	$ 33.19	29.40

LABO0140-003 06/01/2020

BUFFALO, CRAWFORD, GRANT, JACKSON, JUNEAU, MONROE, RICHLAND, TREMPEALEAU (Southern part), AND VERNON COUNTIES

	Rates	Fringes
Laborer, General	$ 30.05	17.88
Laborer: Asbestos/hazardous material remover (Preparation, Removal and Encapsulation of Hazardous Materials from Non-Mechanical Systems)	$ 29.00	17.88

NOTE: Mason Tender $.25 over general laborer scale; Pipelayer $1.00 over general laborer scale

---

LABO0268-001 06/01/2020

AREA 1: BARRON, CLARK (West 1/3), DUNN, PEPIN, POLK, RUSK TAYLOR (West 1/3)

AREA 2: CLARK (East 2/3), LANGLADE, LINCOLN, ONEIDA, PRICE, TAYLOR (East 2/3), VILAS, WOOD

AREA 3: BURNETT, IRON, SAWYER, WASHBURN

	Rates	Fringes
Laborer, General		
Area 1	$ 30.05	17.88
Area 2	$ 29.30	17.88
Area 3	$ 28.45	17.88
Laborer: Asbestos/hazardous material remover (Preparation, Removal, Encapsulation of Hazardous materials from Non-mechanical Systems)		
Area 1	$ 29.00	17.88
Area 2	$ 29.00	17.88
Area 3	$ 29.00	17.88

NOTE: Mason Tender $.25 over general laborer. Burnett, Iron, Sawyer & Washburn $.70 over general laborer.

LABO0330-001 06/01/2020

DODGE, DOOR, FLORENCE, FOND DU LAC, FOREST, GREEN LAKE, KEWAUNEE, MANITOWOC, MARINETTE, MARQUETTE, MENOMINEE, OCONTO, PORTAGE, SHAWANO, WAUPACA,WAUSHARA

	Rates	Fringes
Laborer: Asbestos/hazardous material remover (Preparation, Removal, Encapsulation of Hazardous materials from Non-mechanical Systems)	$ 29.00	17.88
Laborers, General	$ 29.30	17.88

NOTE: Mason Tender $.25 over general laborer.

LABO0464-005 06/01/2020

ADAMS, COLUMBIA, GREEN, JEFFERSON, LAFAYETTE, SAUK, AND WALWORTH COUNTIES

	Rates	Fringes
Laborer, General		
Adams County	$ 29.30	17.88
Remaining Area	$ 30.05	17.88
Laborer: Asbestos/hazardous material remover (Preparation, Removal, Encapsulation of Hazardous Materials from Non-mechanical Systems)		
Adams County	$ 29.00	17.88
Remaining Area	$ 29.00	17.88

LABO0464-008 06/03/2019

	Rates	Fringes
Landscape Laborer	$ 15.84	16.24

LABO1091-001 05/01/2020

BAYFIELD (West of County Trunk A including the Iron River National Fish Hatchery and Great Lakes Transmission Co., Station 6) COUNTY

	Rates	Fringes
Laborer, General	$ 27.61	17.88
Laborer: Asbestos/hazardous material remover (Preparation, Removal, Encapsulation of Hazardous materials from Non-mechanical Systems)	$ 29.00	17.88

LABO1091-002 05/01/2020

ASHLAND & BAYFIELD (East of County Trunk A exclusive of the Iron River National Fish Hatchery and Great Lakes Transmission Co., Station 6) COUNTIES

	Rates	Fringes
Laborer, General	$ 26.16	17.88
Laborer: Asbestos/hazardous material remover (Preparation, Removal, Encapsulation of Hazardous materials from Non-mechanical Systems)	$ 29.00	17.88

PLAS0599-003 07/01/2017

PEPIN COUNTY

	Rates	Fringes
CEMENT MASON/CONCRETE FINISHER	$ 28.67	22.11
PLASTERER	$ 31.67	20.43

PLAS0599-007 06/01/2017

BUFFALO, CRAWFORD, JACKSON, JUNEAU, MONROE, POLK, RICHLAND, TREMPEALEAU, AND VERNON COUNTIES

	Rates	Fringes
CEMENT MASON/CONCRETE FINISHER	$ 28.67	22.11
PLASTERER	$ 31.67	20.43

PLAS0599-011 06/01/2017

GRANT, GREEN, IOWA, AND LAFAYETTE COUNTIES

	Rates	Fringes
CEMENT MASON/CONCRETE FINISHER	$ 34.43	19.93
PLASTERER	$ 33.70	23.13

PLAS0633-046 05/01/2018

BAYFIELD, PRICE, AND SAWYER COUNTIES

	Rates	Fringes
CEMENT MASON/CONCRETE FINISHER	$ 32.66	18.68
PLASTERER	$ 33.14	19.43

PLUM0011-009 05/07/2018

ASHLAND BAYFIELD, BURNETT, IRON, SAWYER, AND WASHBURN COUNTIES

	Rates	Fringes
PLUMBER/PIPEFITTER (Including HVAC work)	$ 40.63	20.72

PLUM0075-006 06/01/2016

DODGE (Watertown), GREEN, JEFFERSON, AND LAFAYETTE COUNTIES

	Rates	Fringes
PLUMBER (Including HVAC work)	$ 40.52	21.47

PLUM0075-008 06/01/2015

COLUMBIA, IOWA, MARQUETTE, RICHLAND, AND SAUK COUNTIES

	Rates	Fringes
PLUMBER (Including HVAC work)	$ 38.82	20.12

PLUM0118-003 06/01/2020

WALWORTH COUNTY

	Rates	Fringes
PLUMBER/PIPEFITTER (Including HVAC work)	$ 43.95	24.35

PLUM0400-002 06/04/2018

ADAMS, CALUMET, DODGE (Except Watertown), DOOR, FOND DU LAC, GREEN LAKE, KEWAUNEE, MANITOWOC, MARINETTE (Except Niagara), MENOMINEE, OCONTO, OUTAGAMIE, SHAWANO, WAUPACA, WAUSHARA, AND WINNEBAGO COUNTIES

	Rates	Fringes
PLUMBER/PIPEFITTER (Including HVAC work)		
(1) Small buildings (except industrial and power plants) where plumbing or heating is $50,000 or less	$ 32.15	17.57

(2) All other work.....$ 36.74 19.06

PLUM0434-004 05/31/2020

BARRON, BUFFALO, CLARK, CRAWFORD, DUNN, FLORENCE, FOREST, GRANT, JACKSON, JUNEAU, LANGLADE, LINCOLN, MONROE, ONEIDA, PEPIN, PIERCE, POLK, PORTAGE, PRICE, RUSK, TAYLOR, TREMPEALEAU, VERNON, VILAS, AND WOOD COUNTIES

	Rates	Fringes
PLUMBER/PIPEFITTER (Including HVAC work).....	$ 42.70	20.47

PLUM0601-006 06/01/2020

DODGE (Watertown), GREEN, JEFFERSON, AND LAFAYETTE COUNTIES

	Rates	Fringes
PIPEFITTER (Including HVAC work).....	$ 47.79	26.57

PLUM0601-008 06/01/2020

COLUMBIA, IOWA, MARQUETTE, RICHLAND, AND SAUK COUNTIES

	Rates	Fringes
PIPEFITTER (Including HVAC work).....	$ 49.53	24.82

SHEE0010-031 05/01/2008

ASHLAND, BAYFIELD AND IRON COUNTIES

	Rates	Fringes
SHEET METAL WORKER.....	$ 27.53	14.61

---

* SHEE0018-003 05/01/2020

FOND DU LAC AND MANITOWOC COUNTIES

	Rates	Fringes
Sheet Metal Worker (Including HVAC work).....	$ 42.02	28.90

---

* SHEE0018-004 05/31/2020

ADAMS, DOOR, FLORENCE, FOREST, GREEN LAKE, KEWAUNEE, MARINETTE, MARQUETTE, MENOMINEE, OCONTO, SHAWANO, WAUPACA, AND WAUSHARA COUNTIES

	Rates	Fringes
Sheet Metal Worker (Including HVAC work).....	$ 42.02	28.90

SHEE0018-014 06/01/2020

DODGE AND JEFFERSON COUNTIES

	Rates	Fringes
Sheet Metal Worker (Including HVAC work)	$ 47.44	24.62

SHEE0018-015 09/01/2019

WALWORTH COUNTY

	Rates	Fringes
SHEET METAL WORKER (Including HVAC work)	$ 37.33	30.76

SHEE0018-017 06/01/2019

GREEN COUNTY

	Rates	Fringes
Sheet Metal Worker (Including HVAC work)	$ 37.50	30.43

SHEE0018-018 05/26/2019

LANGLADE, LINCOLN, ONEIDA, PORTAGE, AND WOOD COUNTIES

	Rates	Fringes
Sheet Metal Worker (Including HVAC work)		
Contracts $120,000 or less	$ 24.46	17.18
Contracts over $120,000	$ 32.25	28.55

SHEE0018-022 06/01/2020

BARRON, BUFFALO, BURNETT, CLARK, DUNN, JACKSON, PEPIN, POLK, PRICE, RUSK, SAWYER, TAYLOR, TREMPEALEAU, AND WASHBURN COUNTIES

	Rates	Fringes
Sheet Metal Worker (Including HVAC work)	$ 33.73	26.91

---

* SHEE0018-023 05/31/2020

COLUMBIA AND SAUK COUNTIES

	Rates	Fringes
Sheet Metal Worker (Including HVAC work)	$ 42.02	28.90

SHEE0018-024 06/01/2020

CRAWFORD, GRANT, JUNEAU, MONROE, RICHLAND, AND VERNON COUNTIES

	Rates	Fringes
SHEET METAL WORKER (Including HVAC work)	$ 34.45	25.58

TEAM0346-003 05/01/2020

ASHLAND, BAYFIELD, BURNETT, SAWYER & WASHINGTON COUNTIES

	Rates	Fringes
TRUCK DRIVER		
2 Axle Trucks	$ 29.75	18.20

TEAM0662-002 06/01/2020

ADAMS, BARRON, BUFFALO, CLARK , DOOR, DUNN, JACKSON, JUNEAU, KEWAUNEE, LANGLADE, LINCOLN, MANITOWOC, MENOMINEE, OCONTO, ONEIDA, PEPIN, POLK, PORTAGE, PRICE, RUSK, SHAWANO, TAYLOR, TEMPEALEAU, WAUPACA & WOOD COUNTIES

	Rates	Fringes
TRUCK DRIVER		
2 Axle Trucks	$ 31.07	22.94

SUWI2002-001 01/23/2002

	Rates	Fringes
Fence Installers	$ 15.00	2.37
GLAZIER	$ 20.21	1.86
Painters:		
Brush & Roller (Excluding Drywall Finishing)	$ 14.64	2.55
Spray	$ 13.72	2.25
Power Equipment Operator		
Backhoe	$ 17.454	7.61
Excavator	$ 17.37	7.45
Front End Loader	$ 23.36	4.61
ROOFER	$ 15.52	3.21
TRUCK DRIVER (3-Axle)	$ 15.28	4.78

WELDERS - Receive rate prescribed for craft performing operation to which welding is incidental.

==========

Note: Executive Order (EO) 13706, Establishing Paid Sick Leave for Federal Contractors applies to all contracts subject to the Davis-Bacon Act for which the contract is awarded (and any solicitation was issued) on or after January 1, 2017. If this contract is covered by the EO, the contractor must provide employees with 1 hour of paid sick leave for every 30 hours they work, up to 56 hours of paid sick leave each year. Employees must be permitted to use paid sick leave for their own illness, injury or other health-related needs, including preventive care; to assist a family member (or person who is like family to the employee) who is ill, injured, or has other health-related needs, including preventive care; or for reasons resulting from, or to assist a family member (or person who is like family to the employee) who is a victim of, domestic violence, sexual assault, or stalking. Additional information on contractor requirements and worker protections under the EO

is available at www.dol.gov/whd/govcontracts.

Unlisted classifications needed for work not included within the scope of the classifications listed may be added after award only as provided in the labor standards contract clauses (29CFR 5.5 (a) (1) (ii)).

The body of each wage determination lists the classification and wage rates that have been found to be prevailing for the cited type(s) of construction in the area covered by the wage determination. The classifications are listed in alphabetical order of ""identifiers"" that indicate whether the particular rate is a union rate (current union negotiated rate for local), a survey rate (weighted average rate) or a union average rate (weighted union average rate).

Union Rate Identifiers

A four letter classification abbreviation identifier enclosed in dotted lines beginning with characters other than ""SU"" or ""UAVG"" denotes that the union classification and rate were prevailing for that classification in the survey. Example: PLUM0198-005 07/01/2014. PLUM is an abbreviation identifier of the union which prevailed in the survey for this classification, which in this example would be Plumbers. 0198 indicates the local union number or district council number where applicable, i.e., Plumbers Local 0198. The next number, 005 in the example, is an internal number used in processing the wage determination. 07/01/2014 is the effective date of the most current negotiated rate, which in this example is July 1, 2014.

Union prevailing wage rates are updated to reflect all rate changes in the collective bargaining agreement (CBA) governing this classification and rate.

Survey Rate Identifiers

Classifications listed under the ""SU"" identifier indicate that no one rate prevailed for this classification in the survey and the published rate is derived by computing a weighted average rate based on all the rates reported in the survey for that classification. As this weighted average rate includes all rates reported in the survey, it may include both union and non-union rates. Example: SULA2012-007 5/13/2014. SU indicates the rates are survey rates based on a weighted average calculation of rates and are not majority rates. LA indicates the State of Louisiana. 2012 is the year of survey on which these classifications and rates are based. The next number, 007 in the example, is an internal number used in producing the wage determination. 5/13/2014 indicates the survey completion date for the classifications and rates under that identifier.

Survey wage rates are not updated and remain in effect until a new survey is conducted.

Union Average Rate Identifiers

Classification(s) listed under the UAVG identifier indicate that no single majority rate prevailed for those classifications; however, 100% of the data reported for the

classifications was union data. EXAMPLE: UAVG-OH-0010 08/29/2014. UAVG indicates that the rate is a weighted union average rate. OH indicates the state. The next number, 0010 in the example, is an internal number used in producing the wage determination. 08/29/2014 indicates the survey completion date for the classifications and rates under that identifier.

A UAVG rate will be updated once a year, usually in January of each year, to reflect a weighted average of the current negotiated/CBA rate of the union locals from which the rate is based.

WAGE DETERMINATION APPEALS PROCESS

1.) Has there been an initial decision in the matter? This can be:

* an existing published wage determination
* a survey underlying a wage determination
* a Wage and Hour Division letter setting forth a position on a wage determination matter
* a conformance (additional classification and rate) ruling

On survey related matters, initial contact, including requests for summaries of surveys, should be with the Wage and Hour Regional Office for the area in which the survey was conducted because those Regional Offices have responsibility for the Davis-Bacon survey program. If the response from this initial contact is not satisfactory, then the process described in 2.) and 3.) should be followed.

With regard to any other matter not yet ripe for the formal process described here, initial contact should be with the Branch of Construction Wage Determinations. Write to:

Branch of Construction Wage Determinations
Wage and Hour Division
U.S. Department of Labor
200 Constitution Avenue, N.W.
Washington, DC 20210

2.) If the answer to the question in 1.) is yes, then an interested party (those affected by the action) can request review and reconsideration from the Wage and Hour Administrator (See 29 CFR Part 1.8 and 29 CFR Part 7). Write to:

Wage and Hour Administrator
U.S. Department of Labor
200 Constitution Avenue, N.W.
Washington, DC 20210

The request should be accompanied by a full statement of the interested party's position and by any information (wage payment data, project description, area practice material, etc.) that the requestor considers relevant to the issue.

3.) If the decision of the Administrator is not favorable, an interested party may appeal directly to the Administrative Review Board (formerly the Wage Appeals Board). Write to:

Administrative Review Board

U.S. Department of Labor
200 Constitution Avenue, N.W.
Washington, DC 20210

4.) All decisions by the Administrative Review Board are final.

==========

END OF GENERAL DECISION"

Infection Control Risk Assessment: Construction & Renovation

Assessment Date:__11/12/2020_

Project Name/Description: Dental Sterilization Remodel

Project Type:_C___ Project Risk Area:__Medium__ Precautions Class:_III__

Risk of Surrounding Areas:

Unit Below:__N/A__ Unit Above:___N/A___ Lateral:____Medium__

Unit Behind:_Low__ Unit in Front:___Med__ Lateral:_____Low_____

Project Details:

Specific site(s) of activity: Dental Sterilization area, within Dental Department adjacent to operatories. Has moderate staff use for sterilization of dental equipment and is adjacent to a busy main corridor with both patient and staff traffic

Probable issues with ventilation, plumbing, electrical: demoing existing sterilization cabinetry. Will need to relocate sterilization equipment to maintain function in dental department. Electrical and plumbing will be demoed and rerouted, extended to match new cabinetry. Existing sprinkler system will not be impacted. Drop ceiling will need to be replaced with removal of drywall bulkhead above existing cabinets.

Containment measures based on assessment above: see contract – dust mitigation, HEPA filters, water and plumbing considerations, electrical considerations, waste containment/transport and appropriate clean-up during/after project

Potential water damage risk/structural compromise: limited to moderate, possible sink but likely from existing plumbing, nothing above/below work area, dental and offices adjacent as well as main hallway and waiting areas

Work done during patient or non-patient care hours: No – will meet with contractor at pre-construction meeting to develop timelines/assess/adjust patient care schedule(s) and or patient traffic patterns

Adequate infection control plans (sinks, isolation/utility rooms, etc): Yes – new cabinetry designed to meet infectious control requirements for sterilization room.

Review of containment issues discussion with project team: will be discussed at pre-construction meeting

Infection Control Construction Plan

Location of Construction: Dental Sterilization Room	Project Start Date: 01-2021
Project Coordinator: XXXXXXX	Estimated Duration: 4 weeks
Contractor Performing Work:	
Supervisor:	Telephone:

YES	NO	CONSTRUCTION ACTIVITY	YES	NO	INFECTION CONTROL RISK GROUP
	X	TYPE A: Inspection, non-invasive activity		X	GROUP 1: Low Risk
	X	TYPE B: Small scale, short duration, moderate to high levels	X		GROUP 2: Medium Risk
X		TYPE C: Activity generates moderate to high levels of dust, requires greater 1 work shift for completion		X	GROUP 3: Medium/High Risk
	X	TYPE D: Major duration and construction activities Requiring consecutive work shifts		X	GROUP 4: Highest Risk

CLASS I	1. Execute work by methods to minimize raising dust from construction operations. 2. Immediately replace any ceiling tile displaced for visual inspection.	3. Minor Demolition for Remodeling
CLASS II	1. Provides active means to prevent air-borne dust from dispersing into atmosphere 2. Water mist work surfaces to control dust while cutting. 3. Seal unused doors with duct tape. 4. Block off and seal air vents. 5. Wipe surfaces with disinfectant.	6. Contain construction waste before transport in tightly covered containers. 7. Wet mop and/or vacuum with HEPA filtered vacuum before leaving work area. 8. Place dust mat at entrance and exit of work area. 9. Remove or isolate HVAC system in areas where work is being performed.
CLASS III	1. Obtain infection control permit before construction begins. 2. Isolate HVAC system in area where work is being done to prevent contamination of the duct system. 3. Complete all critical barriers or implement control cube method before construction begins. 4. Maintain negative air pressure within work site utilizing HEPA equipped air filtration units. 5. Do not remove barriers from work area until complete project is thoroughly cleaned by Env. Services Dept.	6. Vacuum work with HEPA filtered vacuums. 7. Wet mop with disinfectant 8. Remove barrier materials carefully to minimize spreading of dirt and debris associated with construction. 9. Contain construction waste before transport in tightly covered containers. 10. Cover transport receptacles or carts. Tape covering. 11. Remove or isolate HVAC system in areas where work is being performed/
CLASS IV	1. Obtain infection control permit before construction begins. 2. Isolate HVAC system in area where work is being done to prevent contamination of duct system. 3. Complete all critical barriers or implement control cube method before construction begins. 4. Maintain negative air pressure within work site utilizing HEPA equipped air filtration units. 5. Seal holes, pipes, conduits, and punctures appropriately. 6. Construct anteroom and require all personnel to pass through this room so they can be vacuumed using a HEPA vacuum cleaner before leaving work site or they can wear cloth or paper coveralls that are removed each time they leave the work site.	7. All personnel entering work site are required to wear shoe covers 8. Do not remove barriers from work area until completed project is thoroughly cleaned by the Environmental Service Dept. 9. Vacuum work area with HEPA filtered vacuums. 10. Wet mop with disinfectant. 11. Remove barrier materials carefully to minimize spreading of dirt and debris associated with construction. 12. Contain construction waste before transport in tightly covered containers. 13. Cover transport receptacles or carts. Tape covering. 14. Remove or isolate HVAC system in areas where work is being performed.

Additional Requirements: The Infection Control Plan was discussed at the XX-XX-XXX Pre-Construction Meeting.	
This Infection Control Plan was created by: Infection Prevention, Project Coordinator, Tribal Sanitarian	
Reviewed on: _____ By: Infection Control Committee	Plan provided to Contractor on: _____ Received by:_____
Reviewed on: _____ By: Safety Committee	Reviewed on: _____ By: Accreditation Board
My signature below indicates I understand and agree to follow the precautions above. The project site may be inspected by the project coordinator or infection preventionist at any time to ensure compliance with the recommended precautions. I also agree that this document may be modified as necessary throughout the project and that any revisions must be communicated immediately to the project coordinator and infection preventionist.	
Project Coordinator:	Date Signed:
Contractor/Designee:	Date Signed:
Infection Prevention:	Date Signed: